NEAR EAST UNIVERSITY

Faculty of Engineering

Department of Electrical & Electronic Engineering

Halls of Justice Installation

Graduation Project
EE-400

Students: Mustafa Zahid (20033033)
Mustafa Ertuğrul(20032705)
Adem Gedikli (20031905)
İlyas Dolaş (20034183)

Supervisor: Asst. Prof.Dr.
Özgür C. Özerdem

Nicosia – 2008

TABLE OF CONTENTS

ACKNOWLEDGMENTS

'First we want to thank Asist. Prof. Özgür Cemal Özerdem to be our advisor. Under his guidance, we successfully overcome many difficulities and learn about the electrical installation. In each office hours he explained our questions patiently, We felt our quick progress from his advised. He always helps us a lot in our study. We asked many questions in electrical installation and he always answered our questions quickly and in detail.

We also want to thank our friends in NEU, being with them make our four years in NEU full of fun.

Finally we want to thank our families, especially our parents. Without their endless support and love for us, we would never achieve our current position.'

LIST OF ABBREVIATIONS and SYMBOLS

Symbols	Units	Definition
A	m	Width of the area to be illuminated
B	m	Length of the area to be illuminated
S	m^2	Area to be illuninated
E	lx	Illumination level of the area to be illuninated
H	m	Height of the armature form the working plane
h	m	Height of the area to be illuminated
h_1	m	Height of the working plane from floor
$Ø_T$	lm	Total required flux for to the area to be illuminated
d	unitless	Dirtiness factor of the area to be illuminated
η	unitless	Efficiency of the area to be illuminated
N	piece	Number of the armature to be used in the area to be illuminated
$Ø_L$	lm	Armature flux to be used
Z	piece	Number of lamps on the armature to be used
L Types	unitless	Luminary Types to be used
P	W	Power
L.T.P.	W	Total power on the luminaries
E.S.	piece	Number of the elecrical sockets to be used
E.S.P	W	Total power on the electrical sockets
TEL	piece	Number of the telephone sockets to be used
DT	piece	Number of the data sockets to be used
TV	piece	Number of the television sockets to be used
MCB	piece	Miniature circuit breaker
MCCB	piece	Modulated case circuit breaker
ELCB	piece	Earth leakage circuit breaker

ABSTRACT

At the project our aims are installing illumination,sockets and other needed electrical & electrical devices (i.e hand drying machine) with maximum efficiency.Ilumination is the important part of the project. Also illumination theory will be applied to two important theorems about the intensity of an image formed by an optical system. One is that the brightness of the image cannot exceed the brigtness of the extended source that is imaged, and the other is that the illumination in the image decreases as the fourth power of the cosine of the angle of the principal ray.Electrical sockets, switches, are very important in our life because we need sockets in our home or in our work.The earth, the basic idea of an electrical safety earth are pretty much the same everywhere. The case of the equipment is connected to an earth pin on the mains outlet.The compensation, the power factor of a load, which may be a single power-consuming item, or a number of items, is given by the ratio of P/S divided by kVA at any given moment.The value of a power factor will range from 0 to 1.If currents and voltages are perfectly sinusoidal signals, power factor equals cos φ.A power factor close to unity means that the reactive energy is small compared with the active energy, while a low value of power factor indicates the opposite condition.The cables and bus bars, in industrial applications, conductor bars are assembled with insulators in grounded enclosures. The cables are specified for stationary distribution of electrical energy in dry and damp premises. Suitable for hotels, hospitals, underground railways, airports etc to protect people and technical building equipment in the event of fire where there is no requirement for maintaining the function of the cable in the event of fire.Information about AutoCAD supports a number of application programming interfaces for customization and automation. Autodesk has also developed a few vertical programs, sometimes called Desktops, for discipline-specific enhancements.

INTRODUCTION

Istanbul Halls of Justice

The complex which will be the "largest" hall of justice in Europa is planned to be complated in Istanbul by 2010. The project aimed to be one of the most prestigious edifices has international reputation. The construction area of the hall will be 343 thousand square meter. The bidding cost including the VAT is 283.000.000 YTL. The project is te most expensive one realized by the T.R. Ministry of Public Works and Settlement.

The first chapter represents the historal review of electrical installations, electric lighting had advanced from being a curiosity to something with a definite practical future.

Chapter two is including information about AutoCAD supports a number of application programming interfaces for customization and automation. Autodesk has also developed a few vertical programs, sometimes called Desktops, for discipline-specific enhancements. AutoCAD Architecture (formerly Architectural Desktop), for example, permits architectural designers to draw 3D objects such as walls, doors and windows, with more intelligent data associated with them, rather than simple objects such as lines and circles.

Chapter three gives information Microsoft office excel which is the one of the most popular microcomputer applications to date.

Chapter four presents the illumination which is the important part of the project. Also illumination theory will be applied to two important theorems about the intensity of an image formed by an optical system. One is that the brightness of the image cannot exceed the brigtness of the extended source that is imaged, and the other is that the illumination in the image decreases as the fourth power of the cosine of the angle of the principal ray.

Chapter five studies the electrical sockets, switches, are very important in our life because we need sockets in our home or in our work.

Chapter six is studies the cables and bus bars, in industrial applications, conductor bars are assembled with insulators in grounded enclosures. The cables are specified for stationary distribution of electrical energy in dry and damp premises. Suitable for hotels, hospitals, underground railways, airports etc to protect people and technical building equipment in the event of fire where there is no requirement for maintaining the function of the cable in the event of fire.

Chapter seven gives information about the earth, the basic idea of an electrical safety earth (or ground) are pretty much the same everywhere. The case (chassis) of the equipment (and except for special situations, the internal electronics) is connected to an earth pin on the mains outlet.

And the chapter is icludind the compensation, the power factor of a load, which may be a single power-consuming item, or a number of items (for example an entire installation), is given by the ratio of P/S i.e.kW divided by kVA at any given moment.The value of a power factor will range from 0 to 1.If currents and voltages are perfectly sinusoidal signals, power factor equals cos φ.A power factor close to unity means that the reactive energy is small compared with the active energy, while a low value of power factor indicates the opposite condition.

CHAPTER -1-

HISTORICAL REVIEW OF INSTALLATION WORK

As one might expect to find in the early beginnings of any industry, the application, and the methods of application, of electricity for lighting, heating and motive power was primitive in the extreme. Large-scale application of electrical energy was slow to develop. The first wide use of it was for lighting in houses, shops and offices. By the 1870s, electric lighting had advanced from being a curiosity to something with a definite practical future. Arc lamps were the first form of lighting, particularly for the illumination of main streets. When the incandescent –filament lamp appeared on the scene electric lighting took on such a prominence that it severely threatened the use of gas for this purpose. But it was not until cheap and reliable metal-filament lamps were produced that electric lighting found a place in every home in the land. Even then, because of the low power of these early filament lamps, shop windows continued for some time to be lighted externally by arc lamps suspended from the fronts of buildings.

The earliest application of electrical energy as an agent for motive power in industry is still electricity's greatest contribution to industrial expansion. The year 1900 has been regarded as a time when industrialists awakened to the potential of the new form of power.

Electricity was first used in mining for pumping. In the iron and steel industry, by 1917, electric furnaces of both the arc and induction type were producing over 100.000 tons of ingots and castings. The first all-welded ship was constructed in 1920; and the other ship-building processes were operated by electric motor power for punching, shearing, drilling machines and woodworking machinery.

The first electric motor drives in light industries were in the form of one motor-unit per line of shafting. Each motor was started once a day and continued to run throughout the whole working day in one direction at a constant speed. All the various machines driven from the shafting were started, stopped, reversed or changed in direction and speed by mechanical means. The development of integral electric drives, with provisions for starting, stopping and speed changes, led to the extensive use of the motor in small kilowatt ranges to drive an associated single machine, e.g. a lathe. One of the pioneers in the use of motors was the firm of Bruce Peebles, Edinburgh. The firm supplied, in the 1890s, a number of weatherproof, totally-enclosed motors for quarries in Dumfriesshire, believed to be among the first of their type in Britain. The first electric winder ever built in Britain was supplied in 1905 to a Lanark oil concern. Railway electrification started as long ago as 1883, but it was not until long after the turn of this century that any major development took place.

Electrical installations in the early days were quite primitive and often dangerous. It is on record that in 1881, the installation in Hatfield House was carried out by an aristocratic amateur. That the installation was dangerous did not perturb visitors to the house who "...when the naked wires on the gallery ceiling broke into flame ... nonchalantly threw up cushions to put out the fire and then went on with their conversation".

Many names of the early electrical pioneers survive today. Julius Sax began to make electric bells in 1855, and later supplied the telephone with which Queen Victoria spoke between Osborne, in the Isle of Wight, and Southampton in 1878. He founded one of the earliest purely electrical manufacturing firms which exists today and still makes bells and signalling equipment.

The General Electric Company had its origins in the 1880's as a company which was able to supply every single item which went to form a complete electrical installation. In addition it was guaranteed that all the components offered

for sale were technically suited to each other, were of adequate quality and were offered at an economic price.

Specialising in lighting. Falk Stadelman & Co. Ltd began by marketing improved designs of oil lamps then gas fittings, and ultimately electric lighting fittings.

Cable makers W.T. Glover & Co. were pioneers in the wire field. Glover was originally a designer of textile machinery, but by 1868 he was also making braided steel wires for the then fashionable crinolines. From this type of wire it was a natural step to the production of insulated conductors for electrical purposes. At the Crystal Palace Exhibition in 1885 he showed a great range of cables; he was also responsible for the wiring of the exhibition.

The well-known J. & P. firm (Johnson & Philips) began with making telegraphic equipment, extended to generators and arc lamps, and then to power supply.

The coverings for the insulation of wires in the early days included textiles and gutta-percha. Progress in insulation provisions for cables was made when vulcanised rubber was introduced, and it is still used today. The first application of a lead sheath to rubber-insulated cables was made by Siemens Brothers. The manner in which we name cables was also a product of Siemens Brothers. The manner in which we name cables was also a product of Siemens, whose early system was to give a cable a certain length related to a Standard resistance of 0.1 ohm. Thus a No. 90 cable in their catalogue was a cable of which 90 yards had a resistance of 0.1 ohm. Cable sizes were also generally known by the Standard Wire Gauge.

For many years ordinary VRI cables made up about 95 per cent of all insulations. They were used first in wood casing, and then in conduit. Wood casing

was a very early invention. It was introduced to separate conductors, this separation being considered a necessary safe-guard against the two wires touching and so causing fire. Choosing a cable at the turn of the century was quite a task. From one catalogue alone, one could choose from fifty-eight sizes of wire, with no less than fourteen different grades of rubber insulation. The grades were described by such terms as light, high medium or best insulation. Nowadays there are two grades of insulation: up to 600 V and 600 V /1,000 V. And the sizes of cables have been reduced to a more practicable seventeen.

During the 1890s the practice of using paper as an insulating material for cables was well established. One of the earliest makers was the company which later became a member of the present-day BICC Group. The idea of using paper as an insulation material came from America to Britain where it formed part of the first wiring system for domestic premises. This was twin lead sheathed cables. Bases for switches and other accessories associated with the system were of cast solder, to which the cable sheathing was wiped, and then all joints sealed with a compound. The compound was necessary because the paper insulation when dry tends to absorb moisture.

In 1911, the famous 'Henley Wiring System 'came on the market. It comprised flat-twin cables with a lead-alloy sheath. Special junction boxes, if properly fixed, automatically affected good electrical continuity. The insulation was rubber. It became very popular. Indeed, it proved so easy to install that a lot of unqualified people appeared on the contracting scene as 'electricians'. When it received the approval of the IEE Rules, it became an established wiring system and is still in use today.

At the time the lead-sheathed system made its first appearance, another rival wiring system also came onto the scene. This was the CTS system (cab-tyre-sheathed). It arose out of the idea that if a rubber product could be used to stand up to the wear and tear of motor-car tyres on roads, then the material would well be

applied to cover cables. The CTS name eventually gave way to TRS (tough-rubber sheath), when the rubber-sheathed cable system came into general use.

The main competitor to rubber as an insulating material appeared in the late 1930s. This material was PVC (polyvinylchloride), a synthetic material which came from Germany. The material, though inferior to rubber so far as elastic properties were concerned, could withstand the effects of both oil and sunlight. During the Second World War PVC, used both as wire insulation and the protective sheath, became well established.

As experience increased with the use of TRS cables, it was made the basis of modified wiring systems. The first of these was the Callender farm-wiring system introduced in 1937. This was tough-rubber sheathed cables with a semi-embedded braiding treated with a green –coloured compound. This system combined the properties of ordinary TRS and HSOS (house-service overhead system) cables.

So far as conductor material was concerned, copper was the most widely used? But aluminium was also applied as a conductor material. Aluminium, which has excellent electrical properties, has been produced on a large commercial scale since about 1890. Overhead lines of aluminium were first installed in 1898. Rubber-insulated aluminium cables of 3/0.036 inch and 3/0.045 inch were made to the order of the British Aluminium Company and used in the early years of this century for the wiring of the staff quarters at Kinlochleven in Argyllshire. Despite the fact that lead and lead-alloy proved to be of great value in the sheathing of cables, aluminium was looked to for a sheath of, in particular, light weight. Many experiments were carried out before a reliable system of aluminium-sheathed cable could be put on the market.

Perhaps one of the most interesting systems of wiring to come into existence was the MICS (mineral-insulated copper-sheathed cable) which used

compressed magnesium oxide as the insulation, and had a copper sheath and copper conductors. The cable was first developed in 1897 and was first produced in France. It has been made in Britain since 1937, first by Pyrotenax Ltd, and later by other firms. Mineral insulation has also been used with conductors and sheathing of aluminium.

One of the first suggestions for steel used for conduit was made in 1883. It was then called 'small iron tubes '. However, the first conduits were of bitumised paper. Steel for conduits were of bitumised paper. Steel for conduits did not appear on the wiring scene until about 1895. The revolution in conduit wiring dates from 1897, and is associated with the name'Simplex'

Which is common enough today. It is said that the inventor, L. M. Waterhouse, got the idea of close-joint conduit by spending a sleepless night in a hotel bedroom staring at the bottom rail of his iron bedstead. In 1898 he began the production of light gauge close-joint conduits. A year later the screwed-conduit system was introduced.

Non-ferrous conduits were also a feature of the wiring scene. Heavy-gauge copper tubes were used for the wiring of the Rylands Library in Manchester in 1886. Aluminium conduit, though suggested during the 1920s, did not appear on the market until steel became a valuable material for munitions during the Second World War.

Insulated conduits also were used for many applications in installation work, and are still used to meet some particular installation conditions. The 'Gilflex' system, for instance, makes use of a PVC tube which can be bent cold, compared with earlier material which required the use of heat for bending.

Accessories for use with wiring systems were the subject of many experiments; many interesting designs came onto the market for the electrician to use in his work. When lighting became popular, there arose a need for the

individual control of each lamp from its own control point. The 'branch switch' was used for this purpose. The term ' switch ' came over to this country from America , from railway terms which indicated a railway ' point ' , where a train could be ' switched ' from one set of tracks to another. The 'switch', so far as the electric circuit was concerned, thus came to mean a device which could switch an electric current from one circuit to another.

It was Thomas Edison who, in addition to pioneering the incandescent lamp, gave much thought to the provision of branch switches in circuit wiring. The term 'branch' meant a tee-off from a main cable to feed small current-using items. The earliest switches were of the 'turn' type, in which the contacts were wiped together in a rotary motion to make the circuit. The first switches were really crude efforts: made of wood and with no positive ON or OFF position. Indeed, it was usual practice to make an inefficient contact to produce an arc to 'dim' the lights! Needless to say, this misuse of the early switches, in conjunction with their wooden construction, led to many fires. But new materials were brought forward for switch construction such as slate, marble, and, later, porcelain. Movements were also made more positive with definite ON or OFF positions.

The 'turn' switch eventually gave way to the 'tumbler' switch eventually gave way to the 'tumbler' switch in popularity. It came into regular use about 1890. Where the name 'tumbler' originated is not clear; there are many sources, including the similarity of the switch action to the antics of Tumbler Pigeons. Many accessory names which are household words to the electricians of today appeared at the turn of the century: Verity's McGeoch, Tucker and Crabtree. Further developments to produce the semi-recessed, the flush, the ac only, and the 'silent' switch proceeded apace. The switches of today are indeed of long and worthy pedigrees.

It was one thing to produce a lamp operated from electricity. It was quite another thing to device a way in which the lamp could be held securely while

current was flowing in its circuit. The first lamps were fitted with the wire tails for joining to terminal screws. It was Thomas Edison who introduced, in 1880, the screw-cap which still bears his name. It is said he got the idea from the stoppers fitted to kerosene cans of the time. Like much another really good idea, it superseded all its competitive lamp holders and its use extended through America and Europe. In Britain, however, it was not popular. The bayonet-cap type of lamp holder was introduced by the Edison & Swan Co. about 1886. The early type was soon improved to the lamp holders we know today

Ceiling roses, too, have an interesting history; some of the first types incorporated fuses. The first rose for direct attachment to conduit came out in the early 1900s, introduced by Dorman & Smith Ltd.

The first patent for a plug and socket was brought out by Lord Kelvin, a Pioneer of electric wiring systems and wiring accessories. The accessory was used mainly for lamp loads at first, and so carried very small currents. However, domestic appliances were beginning to appear on the market, which meant that sockets had to carry heavier currents. Two popular items were irons and curling-tong heaters. Shuttered sockets were designed by Crompton in 1893. The modern shuttered type of socket appeared as a prototype in 1905, introduced by 'Diamond H'. Many sockets were individually fused, a practice which was later extended to the provision of a fuse in the plug. These fuses were, however, only a small piece of wire between two terminals and caused such a lot of trouble that in 1911 the Institution of Electrical Engineers banned their use. One firm which came into existence which the socket-and-plug was M.K. Electric Ltd. The initials were for 'Multi-Kontakt' and associated with a type of socket-outlet which eventually became the Standard design for this accessory. It was Scholes, under the name of 'Wylex', who introduced a revolutionary design of plug-and-socket: a hallow circular earth pin and rectangular current-carrying pins. This was really the first attempt to 'polarise', or to differentiate between live, earth and neutral pins.

One of the earliest accessories to have a cartridge fuse incorporated in it was the plug produced by Dorman & Smith Ltd. The fuse actually formed one of the pins, and could be screwed in or out when replacement was necessary. It is a rather long cry from those pioneering days to the present system of standard socket-outlets and plugs.

Early fuses consisted of lead wires; lead being used because of its low melting point. Generally, devices which contained fuses were called 'cut-outs', a term still used today for the item in the sequence of supply-control equipment entering a building. Once the idea caught on of providing protection for a circuit in the form of fuses, brains went to work to design fuses and fuse gear. Control gear first appeared encased in wood. But ironclad versions made their due appearance, particularly for industrial use during the nineties. They were usually called 'motor switches', and had their blades and contacts mounted on a slate panel. Among the first companies in the switchgear field were Bill & Co., Sanders & Co. and the MEM Co., whose 'Kantark' fuses are so well known today. In 1928 this company introduced the 'splitter' which affected a useful economy in many of the smaller installations.

It was not until the 1930s that the distribution of electricity in buildings by means of busbars came into fashion, though the system had been used as far back as about 1880, particularly for street mains. In 1935 the English Electric Co. introduced a busbar trunking system designed to meet the needs of the motor-car industry. It provided the overhead distribution of electricity into which system individual machines could be tapped wherever required; this idea caught on and designs were produced and put onto the market by Marryat & Place, GEC and Ottermill.

CHAPTER-2-

AUTOCAD

2.1 What is Autocad

Autocad is a CAD software application for 2D and 3D design and drafting, developed and sold by Autodesk, Inc. Initially released in late 1982, AutoCAD was one of the first CAD programs to run on personal computers, and notably the IBM PC. Most CAD software at the time ran on graphics terminals connected to mainframe computers or mini-computers.

In earlier releases, AutoCAD used primitive entities — such as lines, polylines, circles, arcs, and text — as the foundation for more complex objects. Since the mid-1990s, AutoCAD has supported custom objects through its C++ API. Modern AutoCAD includes a full set of basic solid modeling and 3D tools, but lacks some of the more advanced capabilities of solid modeling applications.

AutoCAD supports a number of application programming interfaces (APIs) for customization and automation. These include AutoLISP, Visual LISP, VBA, .NET and ObjectARX. ObjectARX is a C++ class library, which was also the base for products extending AutoCAD functionality to specific fields, to create products such as AutoCAD Architecture, AutoCAD Electrical, AutoCAD Civil 3D, or third-party AutoCAD-based applications.

AutoCAD's native file format, DWG, and to a lesser extent, its interchange file format, DXF, have become de facto standards for CAD data interoperability. AutoCAD in recent years has included support for DWF, a format developed and promoted by Autodesk for publishing CAD data. In 2006, Autodesk estimated the number of active DWG files to be in excess of one billion. In the past, Autodesk has estimated the total number of DWG files in existence to be more than three billion.

AutoCAD currently runs exclusively on Microsoft desktop operating systems. Versions for Unix and Macintosh were released in the 1980s and 1990s, but these were later dropped. AutoCAD can run on an emulator or compatibility layer like Virtual PC or Wine, albeit subject to various performance issues that can often arise when working with 3D objects or large drawings.

AutoCAD and AutoCAD LT are available for German, French, Italian, Spanish, Japanese, Korean, Chinese Simplified (No LT), Chinese Traditional, Russian, Czech, Polish, Hungarian (No LT), Brazilian Portuguese (No LT), Danish, Dutch, Swedish, Finnish, Norwegian and Vietnamese. The extent of localization varies from full translation of the product to documentation only.

2.2 AutoCAD LT

AutoCAD LT is a "scaled down" version of AutoCAD. It costs less (approx. $900 USD versus around $4,000 USD for the full AutoCAD). It is also available for purchase at computer stores, unlike AutoCAD which has to be purchased from an official Autodesk dealer. It was developed so Autodesk could have an entry-level CAD package available to compete in that price class. Today AutoCAD LT is marketed as a CAD package for those who only need 2D functionality. Compared to the full edition of AutoCAD, AutoCAD LT lacks several features. Most notably, it has no 3D modeling capabilities (though it has a full suite of 3D viewing functions for looking at 3D models created in other CAD packages) and does not include any programming interfaces, such as support for most 3rd party programs and does not support LISP programs. A full listing of differences is on the Autodesk website. AutoCAD LT originated by taking the codebase of AutoCAD and commenting out substantial portions, which allowed AutoCAD and AutoCAD LT to be developed simultaneously.

2.3 AutoCAD Student Versions

AutoCAD is licensed at a significant discount over commercial retail pricing to qualifying students and teachers, with both a 14 month and perpetual license available. The student version of AutoCAD is functionally identical to the full commercial version, with one exception: DWG files created or edited by a student version have an internal bit-flag set (the "educational flag"). When such a DWG file is printed by any version of AutoCAD (commercial or student), the output will include a plot stamp / banner on all four sides. Objects created in the Student Version cannot be used for commercial use. These Student Version objects can and will 'infect' a commercial version DWG file if imported.

2.4 Vertical programs

Autodesk has also developed a few vertical programs, sometimes called Desktops, for discipline-specific enhancements. AutoCAD Architecture (formerly Architectural Desktop), for example, permits architectural designers to draw 3D objects such as walls, doors and windows, with more intelligent data associated with them, rather than simple objects such as lines and circles. The data can be programmed to represent specific architectural products sold in the construction industry, or extracted into a data file for pricing, materials estimation, and other values related to the objects represented. Additional tools allow designers to generate standard 2D drawings, such as elevations and sections, from a 3D architectural model. Similarly, Civil Design, Civil Design 3D, and Civil Design Professional allow data-specific objects to be used, allowing standard civil engineering calculations to be made and represented easily. AutoCAD Mechanical, AutoCAD Electrical, AutoCAD Civil 3D, and AutoCAD Map 3D are other examples of industry-specific CAD applications built on the AutoCAD platform.

CHAPTER -3-

MICROSOFT OFFICE EXCEL

Microsoft Excel (full name Microsoft Office Excel) is a spreadsheet application written and distributed by Microsoft for Microsoft Windows and Mac OS X. It features calculation, graphing tools, pivot tables and, except for Excel 2008 for Mac OS X, a macro programming language called VBA (Visual Basic for Applications). It is overwhelmingly the dominant spreadsheet application available for these platforms and has been so since version 5 in 1993 and is bundled as part of Microsoft Office. Excel is one of the most popular microcomputer applications to date.

3.1 History

Microsoft originally marketed a spreadsheet program called Multiplan in 1982, which was very popular on CP/M systems, but on MS-DOS systems it lost popularity to Lotus 1-2-3. The first version of Excel was released for the Mac in 1985 and the first Windows version (numbered 2.05 to line-up with the Mac and bundled with a run-time Windows environment) was released in November 1987. Lotus was slow to bring 1-2-3 to Windows and by 1988 Excel had started to outsell 1-2-3 and helped Microsoft achieve the position of leading PC software developer. This accomplishment, dethroning the king of the software world, solidified Microsoft as a valid competitor and showed its future of developing GUI software. Microsoft pushed its advantage with regular new releases, every two years or so. The current version for the Windows platform is Excel 12, also called Microsoft Office Excel 2007. The current version for the Mac OS X platform is Microsoft Excel 2008.

Early in its life Excel became the target of a trademark lawsuit by another company already selling a software package named "Excel" in the finance industry. As the result of the dispute Microsoft was required to refer to the

program as "Microsoft Excel" in all of its formal press releases and legal documents. However, over time this practice has been ignored, and Microsoft cleared up the issue permanently when they purchased the trademark of the other program. Microsoft also encouraged the use of the letters XL as shorthand for the program; while this is no longer common, the program's icon on Windows still consists of a stylized combination of the two letters, and the file extension of the default Excel format is *.xls*. Excel offers many user interface tweaks over the earliest electronic spreadsheets; however, the essence remains the same as in the original spreadsheet, VisiCalc: the cells are organized in rows and columns, and contain data or formulas with relative or absolute references to other cells.

Excel was the first spreadsheet that allowed the user to define the appearance of spreadsheets (fonts, character attributes and cell appearance). It also introduced intelligent cell recomputation, where only cells dependent on the cell being modified are updated (previous spreadsheet programs recomputed everything all the time or waited for a specific user command). Excel has extensive graphing capabilities, and enables users to perform mail merge.

When first bundled into Microsoft Office in 1993, Microsoft Word and Microsoft PowerPoint had their GUIs redesigned for consistency with Excel,[*citation needed*] the killer app on the PC at the time.

Since 1993, Excel has included Visual Basic for Applications (VBA), a programming language based on Visual Basic which adds the ability to automate tasks in Excel and to provide user defined functions (UDF) for use in worksheets. VBA is a powerful addition to the application which, in later versions, includes a fully featured integrated development environment (IDE). Macro recording can produce VBA code replicating user actions, thus allowing simple automation of regular tasks. VBA allows the creation of forms and in-worksheet controls to communicate with the user.

The automation functionality provided by VBA has caused Excel to become a target for macro viruses. This was a serious problem in the corporate world until antivirus products began to detect these viruses. Microsoft belatedly took steps to prevent the misuse by adding the ability to disable macros completely, to enable macros when opening a workbook or to trust all macros signed using a trusted certificate.

Versions 5.0 to 9.0 of Excel contain various Easter eggs, although since version 10 Microsoft has taken measures to eliminate such undocumented features from their products.

3.2 Versions

Versions for Microsoft Windows include:

- 1987 Excel 2.0 for Windows
- 1990 Excel 3.0
- 1992 Excel 4.0
- 1993 Excel 5.0 (Office 4.2 & 4.3, also a 32-bit version for Windows NT only on the PowerPc, DEC Alpha, and MIPS)
- 1995 Excel for Windows 95 (version 7.0) - included in Office 95
- 1997 Excel 97 - included in Office 97 (x86 and also a DEC Alpha version)
- 1999 Excel 2000 (version 9.0) included in Office 2000
- 2001 Excel 2002 (version 10) included in Office XP
- 2003 Excel 2003 (version 11) included in Office 2003
- 2007 Excel 2007 (version 12) included in Office 2007 ,

Versions for the Apple Macintosh Include:

- 1985 Excel 1.0
- 1988 Excel 1.5
- 1989 Excel 2.2

- 1990 Excel 3.0
- 1992 Excel 4.0
- 1993 Excel 5.0 (Office 4.X -- Motorola 68000 version and first PowerPC version)
- 1998 Excel 8.0 (Office '98)
- 2000 Excel 9.0 (Office 2001)
- 2001 Excel 10.0 (Office v. X)
- 2004 Excel 11.0 (part of Office 2004 for Mac)
- 2008 Excel 12.0 (part of Office 2008 for Mac)

Versions for OS/2 include:

- 1989 Excel 2.2
- 1990 Excel 2.3
- 1991 Excel 3.0

Versions of Excel up to 7.0 were limited to data sets containing up to 16K (2^14) rows. Versions 8.0 through 11.0 could handle 64K (2^16) rows and 256 columns (2^8 as label 'IV'). Version 12.0 can handle 1M (2^20=1048576) rows, and 16384 (2^14 as label 'XFD') columns.

3.3 File formats

Microsoft Excel up until 2007 version used a proprietary binary file format called Binary Interchange File Format (BIFF) as its primary format.[2] Excel 2007 uses Office Open XML as its primary file format, an XML-based container similar in design to XML-based format called "XML Spreadsheet" ("XMLSS"), first introduced in Excel 2002.[3] The latter format is not able to encode VBA macros.

Although supporting and encouraging the use of new XML-based formats as replacements, Excel 2007 is still backwards compatible with the traditional,

binary, formats. In addition, most versions of Microsoft Excel are able to read CSV, DBF, SYLK, DIF, and other legacy formats.

- **Binary**

The binary format specification has been available from Microsoft on request but since February 2008 the .XLS format specification can be freely downloaded and implemented under the Open Specification Promise patent licensing.

- **Programming**

A valuable aspect of Excel is the ability to write code using the programming language Visual Basic for Applications (VBA). This code is written using an editor viewed separately from the spreadsheet.

- **Criticism**

Criticisms of spreadsheets in general also apply to Excel. See Spreadsheet shortcomings. Criticisms specific to Excel include accuracy, date problems and the Excel 2007 display error.

- **Accuracy**

Due to Excel's foundation on floating point calculations, the statistical accuracy of Excel has been criticized, as has the lack of certain statistical tools. Excel proponents have responded that some of these errors represent edge cases and that the relatively few users who would be affected by these know of them and have workarounds and alternatives.

CHAPTER -4-

ILLUMINATION

4.1 Definition of Illumination

In most optics texts, illumination is either not mentioned, or is given only cursory treatment. The probable reason for this is that illumination involves the psychophysics of the visual sense, which may seem out of place in "straight" physics. However, illumination is not only of considerable practical importance, but its definitions and methods are applicable to the transfer of any kind of radiant energy. The strange units of illumination may be regarded askance, but a basic unit, the candela, is a fundamental unit of the SI system. The theory of illumination involves only the cosine factor for projecting areas, and the inverse-square spreading from a point source. Its practical results are expressed as surface integrals, which can now be done numerically with computer aid. The theory, therefore, is quite simple and easily mastered. Names and definitions often create confusion, however, which this article will strive to overcome.

The measurement of the energy of radiation, an objective quantity that can be measured in W, is called radiometry. when the spectral sensitivity of the eye is taken into account, the measurement is called photometry, where light is measured in lumens. Photometry is semi-objective, intermediate between the physical stimulus of energy and the psychophysical response of brightness. Although we often say "eye", the visual sense is actually located in the brain; the eye is merely a sensor.

The results of illumination theory will be applied to two important theorems about the intensity of an image formed by an optical system. One is that the brightness of the image cannot exceed the brigtness of the extended source that is imaged, and the other is that the illumination in the image decreases as the

fourth power of the cosine of the angle of the principal ray (the one through the centre of the entrance pupil).

4.1.1 Lumens

We use the same word "light" for electromagnetic radiation of frequencies in the narrow band 4 x 10^{14} Hz to 8 x 10^{14} Hz, and also for the psychological sensation produced by it when it impinges on our eyes and excites our visual sense. The energy in physical light can be expressed in watt, which is precisely defined. Its value in producing sensation, the strength of which is called "apparent brightness," is less well defined because of the difficulty in the quantitative evaluation of sensation. Nevertheles, by averaging the responses of many observers, a curve of the relative efficiency of energy at different spectral wavelengths in producing sensation can be determined. The result is called the "Standard Observer,"(as shown Figure 4.1) whose spectral sensitivity is plotted at the left. The peak of this curve is at 555 nm, taken as unity, and is down to 0.0004 at 400 nm and 735 nm.

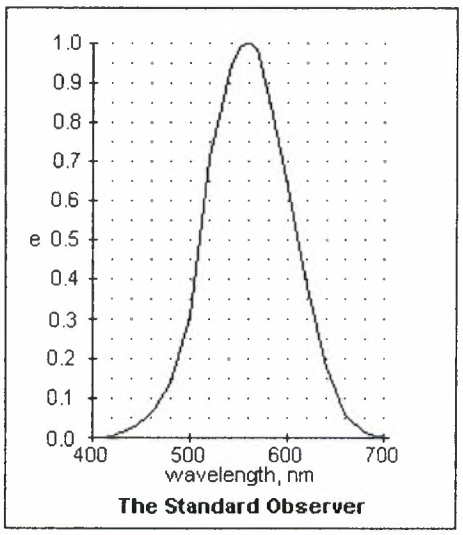

Figure 4.1

The commonly used visual range of 380-760 nm includes a lot of worthless "tail" region. A better statement would be 500-630 nm, showing how narrow the

eye's spectral response really is. A quantity called luminous flux, F, is defined that is analogous to energy, but reflects the effectivness of the radiation at producing visual sensation. This unit is the lumen, and at the peak of the photopic (light-adapted) eye's sensitivity, 680 lm = 1 W (some references give 683; the difference is inconsequential). Now we can convert any spectral distribution of energy into lumens with precision, and work with lumens as we would work with energy. It is only necessary to multiply the energy in watts in each small wavelength interval by the visual efficiency, and sum the results, multiplying by 680 or 683 to get the lumens.

It must be carefully appreciated that lumens do not measure brightness, which is like loudness in acoustics. Establishing a scale of brightness is a completely different matter, and one that belongs exclusively to psychophysics. All we know is that equal amounts of luminous flux produce equal brightness, and more flux means more brightness, but no more than that. In fact, brightness is about proportional to the logarithm of the luminous flux (Fechner's Law). Brightness could be defined by the relation;

$$\mathbf{B = k \log(F/F_0)}$$

Where we would have to choose a constant k and a reference luminous flux F_0. Doubling the luminous flux does not double the apparent brightness. The term "brightness" was once used for certain photometric quantities, but now has been replaced by "luminance" to avoid confusion with psychophysical brightness. The eye can, however, detect equality of brightness quite reliably, and this property is a valuable one. It is impossible to say when one surface is twice as bright as another, so establishing a quantitative scale of brightness is difficult.

We may proceed as we have done for lumens with any similar weighted energy distribution, or with energy itself, in what follows. Some of the names used, however, are peculiar to illumination and lumens, and should not be used with energy or other radiant quantities. The Latin word lumen, luminis (n.) is one

of two words meaning "light." The other is lux, lucis (f.). Lumen was often thought of as light coming from the eye, or a lamp, while lux was light coming into the eye, or from the sun or moon. Both these words are used in photometry to name concepts and units. Light measured in lumens may be monochromatic, but the concept is really intended for use with broad-spectrum light, often perceived as white.

4.1.2 Intensity

Now let us consider a source of luminous flux, and a specially simple one that has no spatial extension, but emits luminous flux along radial lines. This point source need not be equally strong in all directions, and can be as anisotropic as desired. Any finite amount of radiation must be emitted in a finite cone surrounding the direction considered, that can be made as small as desired. This cone has its vertex at the source, and its base of area dA at a distance r from the source, the normal to dA making an angle of φ with the radius. Then, this cone is measured by the quantity;

$$\mathbf{d\Omega = dA \cos \varphi / r^2}$$

Above equation called a differential solid angle, measured in steradians. The definition is illlustrated at the right. It is positive or negative as the normal to dA points outwards or inwards. It is clear that the total solid angle surrounding a point is 4π.

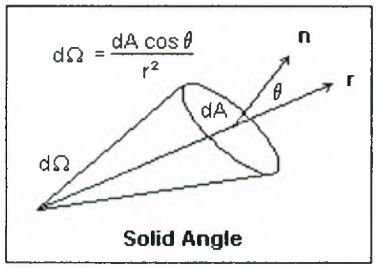

Figure 4.2

The luminous intensity I of a point source is the ratio $dF/d\Omega$, and is in general a function of direction. It is measured in candela, cd. If 1 lm is emitted per steradian, the intensity is 1 cd. An isotropic point source of intensity I cd, then, emits $4\pi I$ lm. The candela is not far from the actual luminous intensity of a normal candle flame, and was once defined in terms of standard lamps burning pentane, amyl acetate, or colza oil. These days it is the intensity of an area of 1/60 cm^2 of a black body at 2042K (freezing platinum). A 60W gas-filled tungsten incandescent lamp provides about 870 lm when new. This corresponds to 14.5 lm/W referred to the electrical input power to the lamp. If the lamp radiated uniformly, its luminous intensity would be 69 cd. The specification of lamps by candlepower was once common, but it is easier just to give the electrical input if you want to make substandard lamps. Actually, both should be given to estimate the balance between life and efficiency. A very efficient lamp will burn hot and expire sooner from evaporation of the tungsten. Long-life lamps are easily made by simply reducing the lumens per watt. A 400W high pressure sodium arc gives 50,000 lm, or 125 lm/W, about twice the efficiency of a fluorescent lamp. An Edison carbon-filament lamp gave about 3 lm/W. This efficiency should not be confused with the visual ratio of 680 lm/W, where the energy is already in the form of radiation. If all the energy input to a lamp were output at 555 nm, then its efficiency would be 680 lm/W, which we can regard as a kind of upper limit, never closely approached. The renaming of the time-honored luminous efficiency to "luminous efficacy" is yet another example of worthless pedanticism.

4.1.3 Illumination

The luminous flux falling on the area dA from a source of intensity I is given by $dF = IdA \cos \varphi/r^2$, as shown in the diagram at the left. This follows directly from the definition of I as luminous flux per unit solid angle and the definition of solid angle. If the source is an extended one, then this must be integrated over the source area. The luminous flux per unit area falling on a surface is called the illumination E of the surface, and is measured in lm/m^2. A

lm/m^2 is called a lux, and a lm/cm^2 is called a phot. Clearly, 10000 lx = 1 phot, for what it is worth. For a point source, (Figure 4.3)

$$\mathbf{E = dF/dA = I \cos \varphi / r^2.}$$

All that is involved here is an intensity in cd and a distance. We get different units if we take the metre, centimetre and foot as the distance units. So, in addition to the lux and the phot, we have the ft-cd, foot candle, which is lm/ft^2. It is easy to convert between these units, but it would be less confusing to use the full dimensions rather than the given names. I get 1 ft-cd = 10.76 lux. See if you agree. 30 ft-cd or 300 lux is considered adequate for normal work. A ft-cd (fc) is 0.929 milliphots, by the way.

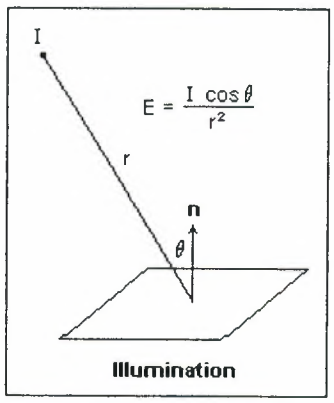

Figure 4.3

The term illuminance has been proposed to replace illumination, apparently to show that the word has a technical meaning that should be distinguished from the general term illumination. This is yet another useless complication, with much less reason than the substitution of luminance for brightness. It might even create some confusion with luminance, which sounds similar. Nobody confuses illumination with □amination, and if one does, it is harmless.

4.1.4 Luminance

Most of the confusion in illumination calculations now comes when we consider the illuminated surface as a new source of luminous flux. Illuminated surfaces differ greatly in their response to incident light. A specularly reflecting surface, such as that of a metal, reflects the light according to the laws of reflection. A surface may be perfectly absorbing, or black, and in this case it just soaks up the luminous flux and does not return any. Most surfaces are somewhere in between. The science of illumination mainly concerns itself with the ideal case of a diffusing surface as defined by Lambert. Such a lambertian surface does not lose any incident radiant flux, but re-emits it in all the available solid angle, which here is 2π radians, on the illuminated side of the surface. Moreover, it emits it so that the surface appears equally bright from any direction. That is, equal projected areas radiate equal amounts of luminous flux. Though this is an ideal, many real surfaces approach it.

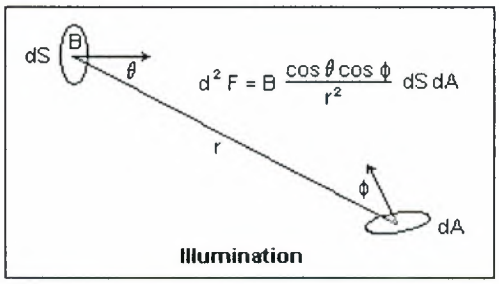

Figure 4.4

We consider, then, an infinitesimal area dS of a lambertian surface emitting luminous flux at an angle θ with its normal, into solid angle dΩ. Then,(Figure 4.4)

$$\mathbf{d^2F = BdS \cos\theta\, d\Omega,}$$

where d^2F is written to indicate that it contains two differentials, dS and dΩ. The factor B is a constant for a lambertian surface (it may vary with θ for a more

general surface). The illumination of an element of surface dA by an element of bright surface dS is shown in the diagram. The expression involves only cosine factors and the inverse square spreading, so it should be easy to understand. The letter B suggests brightness, which was its original name, but possible confusion with the psychophysical brightness has led to its renaming as luminance. Since $dF/d\omega$ is measured in cd, B must be measured in cd/m^2, cd/cm^2 or cd/ft^2. The cd/m^2 has been named the nit, and the cd/cm^2 the still b by the enthusiasts for unit names, not altogether felicitously. The nit is in disgrace, but the stilb appears to be officially sanctioned. The name comes from the Greek stilbw, "I shine." Nit comes from Latin niteo, also meaning "I shine." Nit is also the larva of the head louse

If we integrate over dS (presuming $d\Omega$ remains unchanged), we find $dF = I\, d\Omega$, where $I = \int B \cos\theta\, dS$. If θ is also about constant, then $I = B\,(S \cos\theta) = B \times$ projected area, which makes clear Lambert's definition of his ideal diffuse reflecting surface. If we are looking normal to a disc of radius a and luminance B, then its intensity is $\pi a^2 B$ cd. The illumination at a distance r will then be $E = \pi(a/r)^2 B$. The angular subtense of the diameter of the disc is $2a/r = \delta$. Therefore, $E = (\pi/4)\delta^2 B$. When finding the illumination due to an extended source, $dI = B \cos\theta\, dS$.

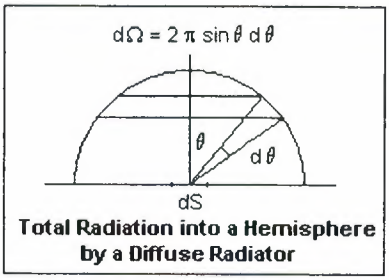

Figure 4.5

The luminance of the sun is about 1.6×10^9 cd/m^2, and its angular subtense is $\delta = 0.5° = 8.73 \times 10^{-3}$ rad. Therefore, E = 96,000 lux on a surface normal to the sun's rays, or 62,000 lux on the level ground when the sun's elevation is 50°. The moon's brightness is only about 2500 cd/m^2, so it illuminates a surface normal to its rays with 0.15 lux. The remarkable adaptation of our eyes to the full range of

natural illumination is much to be admired, and gives a good reason for logarithmic response. 120 lux is the geometric mean of solar and lunar illumination, and this is about the lower limit for comfortable vision. The luminance of a 400W high-pressure sodium lamp is 780 cd/cm^2.

The total luminous flux E emitted per unit area from a lambertian surface of luminance B is easily calcuated. $\int(0,\pi/2) \cos\theta \, d\Omega = 2\pi \int \cos\theta \sin\theta \, d\theta = \pi$, so $E = \pi B$. The construction of this integral is shown at the left. Note that the radius of the hemisphere is immaterial. An area of luminance 1 cd/m^2 emits π lm/m^2. This factor of pi should cause no confusion if its source is kept in mind. However, there are other units of luminance B that include it. A surface with a luminance of $1/\pi$ cd/m^2 emits 1 lm/m^2. This amount of luminance is called an apostilb, confusingly changing from centimetres to metres, so a square metre of lambertian diffuse radiator radiates a total amount of lumens equal to its luminance in apostilb. Similarly, $1/\pi$ cd/cm^2 is a lambert, and $1/\pi$ cd/ft^2 is a foot-lambert. In Greek, apo means "away from," so apostilb is "I shine out." We should have consistently used apostilbs for lamberts, and "exnits" for cd/πm^2. All this Greek and Latin is interesting, but I prefer to use only lumens, candela and the distance unit so I can keep things straight. The factor of π applies only to an ideal lambertian radiator, of course. If you assume that a surface reradiates all the luminous flux that falls on it, then its luminance in apostilbs, lamberts or foot-lamberts is the same as its illumination in lux, phot or ft-cd.

Since the idea of lamberts may be confusing, perhaps another description would be welcome. Suppose you are looking at a small illuminated diffuse reflector of area dA from a certain angle, and receive a flux of dF lumens from it. The projected area normal to your line of vision is $dS\cos\theta$. If you look at it from a different direction, the projected area may change, but the area will look equally bright, which means the same flux per unit projected area. We may also introduce the solid angle $d\Omega$ of your pupil to find the flux per unit solid angle as well, which will allow us to integrate the flux over any surface. Then, our observation is that

$dF/d\Omega dA\cos\theta$ equals a constant, say L, so that $dF = L\cos\theta\, dAd\Omega$. To find the total light emitted by dA, we integrate over $d\Omega=2\pi \sin\theta d\theta$ from $\theta = 0$ to $\pi/2$. The result is $dF = \pi LdA$, so the constant L is $L = (1/\pi)dF/dA = E/\pi$, or the total flux emitted (which will be a fraction of the total illumination) divided by π. A lambert is a lumen/cm^2 received and reemitted per unit solid angle $d\Omega$, not the luminance B, which is also lumen/cm^2, but directly emitted into $d\Omega$.

If a diffuse surface receives E lumens/cm^2, then E/π is its surface brightness in lamberts, and the light emitted at an angle θ into solid angle $d\Omega$ is $(E/\pi)dA\cos\theta\, d\Omega$. The total light emitted from dA is then E.

4.2 Types of Lamps

4.2.1 Filament Lamps

Almost all filament lamps for general lighting service are made to last an average of at least 1000 hours. This does not imply that every individual lamp will do so, but that the short-life ones will be balanced by the long-life ones; with British lamps the precision and uniformity of manufacture now ensures that the spread of life is small, most individual lamps in service lasting more or just less than 1000 hours when used as they are intended to be used.

In general, vacuum lamps, which are mainly of the tubular and fancy shapes, can be used in any position without affecting their performance. The ordinary pear-shaped gas filled lamps are designed to be used in the cap-up position in which little or no blackening of the bulb becomes apparent in late life. The smaller sizes, up to 150 W, may be mounted horizontally or upside-down, but as the lamp ages in these positions the bulb becomes blackened immediately above the filament and absorbs some of the light. Also vibration may have a more serious effect on lamp life in these positions Over the 150 W size, burning in the wrong position leads to serious shortening of life.

4.2.2 Incandescent Lamps

In broad terms, incandescent lamps are cheap to install but expensive to run. They can be justified if initial costs must be kept to a minimum and the annual hours of use are small or they are to be used intermittently with frequent switching. In some cases, the effects required in display or prestige interiors may warrant the use of small incandescent sources due to the precise control possible, however they should not normally be used for the general lighting of interiors.

Light is produced in an incandescent lamp by heating a thin metal wire to very high temperatures (around 2200°C), causing it to incandesce or glow. The wire is called a filament and the incandescence is a result of the filament's resistance to the flow of electrical current. Filaments are almost universally made from Tungsten as no other substance is as efficient in converting electrical energy into light on the basis of life and cost. Tungsten has four important characteristics in this regard: a high melting point, low evaporation, high strength yet reasonably ductile, and it has desirable radiation characteristics. The most common filament letter designations are straight (s), coiled (c), coiled coil (cc) and ribbon or flat (r). Coiled coil filaments are the most efficient and widely used filament type.

4.2.3 Tungsten Halogen

Some high intensity / long life globes are called tungsten halogen or quartz halogen. These lamps are filled with a halogen gas, usually bromide or iodine. The nature of this gas means that any tungsten atoms that evaporate from the surface of the filament combine chemically with surrounding iodine atoms. In this state, they cannot form a black coating on the inside of the bulb, moving around until they impact with the hot filament. When this happens, they split back into tungsten and iodine, depositing the tungsten atom back onto the filament and releasing the iodine atom to continue the cycle. This allows much higher operating temperatures which require special bulbs, usually made from quartz or fused silica.

Tungsten-halogen lamps are dimmable. However, dimming will reduce the bulb temperature causing the tungsten-iodine cycle to stop, resulting in bulb wall blackening. Manufacturers claim that turning up the lamp to "full on" will clean the lamp. Extended dimming will increase lumen depreciation and reduce lamp life slightly.

Tungsten-halogen is an expensive incandescent lamp that has a very compact envelope which makes it an excellent lamp where optical control is important. It still has all of the negative aspects of the standard incandescent which are a relatively short life and a low efficacy which makes the tungsten-halogen expensive to operate and maintain. Color rendition, however, is excellent.

The normal voltage (120/240 V) lamp requires no auxiliary equipment (no ballast) which results in a slightly lower initial cost. The low voltage tungsten-halogen lamps require a step down transformer to reduce the line voltage from 120/240 V to 12 V. The transformer adds to the initial cost of the system and introduces a device that may require additional maintenance and has to be put somewhere.

4.2.4 Electrical Discharge Lamps

When electric current is passed through a low pressure gas, the electrons flowing between the two electrodes collide with gas atoms, temporarily increasing their energy. These atoms quickly decay to their stable state, releasing photons of ultraviolet radiation. Phosphor coatings on the inside of the bulb absorb most of this energy and re-radiate it as visible light.

4.2.4.1 Flourescent Lamps

The most common application of this technology is in tubular fluorescent lamps. A range of different phosphor coatings are used to modify the output spectrum. The standard fluorescent tube has a diameter of 38mm and a length of

0.6, .9, 1.2, 1.5, 1.8 or 2.4 metres. More recently, such lamps are available in both circular form as well as compact fluorescents utilising folded tubes of much smaller diameter.

The fluorescent lamp requires three elements or components to produce visible light:

1.Electrodes (Cathodes)

Electrodes are the electron-emitting devices. Two types of cathodes are in current use. The hot cathode is a coiled coil or a triple-coiled tungsten filament coated with an alkaline earth oxide that emits electrons when heated. The electrons are boiled off the cathode at about 900°C. The cathode of a cold cathode lamp is a pure iron tube that also has an electron-emitting material applied inside the tube. The cold cathodes are subjected to higher voltage, releasing electrons at about 150°C. Cold Cathode lamps are used in special application such as neon signs and can be bent into different shapes. The hot cathode lamp is the most common type of electrode used in fluorescent lamps for most applications. Therefore, we shall not describe cold-cathode lamps.

2.Gases

A small quantity of mercury droplets are placed in the fluorescent tube. During the operation of the lamp, the mercury vaporizes at a very low pressure. At this low pressure, the current flowing through the vapor causes the vapor to radiate energy principally at a single wavelength in the ultraviolet region of the spectrum (253.7nm). The pressure of the mercury is regulated during operation by the temperature of the tube wall.The lamp also contains a small amount of a highly purified rare gas. Argon and argon-neon are the most common, but krypton is sometimes used. The gas ionises readily when a sufficient voltage is applied to the lamp. The

ionized gas decreases in resistance quickly, allowing current to flow and the mercury to vaporise.

3.Phosphor

This is the chemical coating on the inside wall of the tube or enclosure. When the phosphor is excited by ultraviolet radiation at 253.7nm, the phosphor produces visible light by fluorescence. That is, visible light from a fluorescent lamp is produced by the action of ultraviolet energy on the phosphor coating on the inside surface of the tube or enclosure. The phosphor mixture can be altered to change the color of the lamp or the lamp's spectral power distribution.

4.2.4.2 Low Pressure Sodium Vapour

Another commonly used discharge lamp is based on Sodium Vapour. When this type of lamp is first switched on, a small current passes through the gas giving off a faint red discharge. After several minutes the sodium inside evaporates. The resulting sodium vapour produces the almost totally monochromatic emission characteristic to this lamp.(This makes colour perception very difficult which means that it is almost solely used for street lighting.

The rated life for all wattages is around 18,000 hours based on a burning cycle of 5 hours per start. Burning position is critical to lamp life since lamp failure is due to the migration of the sodium toward the electrodes. This migration causes an increase in the watts consumed by the lamp over its life, which results in electrode failure. The lumen output of these lamps actually increases slightly over the life of the lamp. Lumen output is said to be constant over the operating temperature range of -10°C to +40°C. The effect on lumen output when the lamp is operated outside this temperature range has not been published.

4.2.4.3 High Pressure Sodium Vapour

These are not as efficient, but radiate energy across the visible spectrum. They are typically golden-white in colour. Note the sudden dip in its response at 589nm. This is due to self-absorption at those frequencies by the gas itself.

4.2.4.4 High Pressure Mercury Vapour

Mercury vapour lamps have resonant emissions at 185nm and 254nm, both in the UV range. At high pressure, the gas itself absorbs some of this radiation and re-emits it as visible light.

CHAPTER 5

SOCKETS and SWITCHES

5.1 Electrical Sockets

Sockets are very important in our life because we need sockets in our home or in our work. To operate electrical devices sockets that we use have to be made to TS _ 40.

Sockets are in two groups for a safety.

1. Normal sockets
2. Ground sockets

Electrical sockets have come a long way from just being a connectivity device to plug in your appliances. Today there is such a wide variety available, that you end up being confused on which one to install at home.

There are many types available, but to start the classification, we go by number of connections offered. We have a traditional 2 pin socket which is used for simple devices like tape recorders, Table lamps and so on. And then we have the 3 pin socket, where the third pin is the Ground pin

We have again strayed from the main topic, but only for a while. The 3 pin socket is very common and these days the two pin ones are more or less obsolete, atleast from the builder's perspective.

We have the common 5A socket used for light devices and the 15A socket for the heavy duty devices such as washing machines, wet grinders, water heaters etc. It is always good to plan the number of sockets that you would need, in order to avoid using extension chords. For example, in the living room, you may need:

- 1 socket for television
- 1 socket for DVD player
- 1 socket for home theatre
- 1 socket for Audio Player
- 1 socket for Set top Box
- 1 socket for Reading Lamp
- 1 socket for mosquito eliminating dispenser

This list is just to give you an idea so as to how you need to budget the socket availability. Remember, the earlier you budget and convey this to the electrician, he can suitably select a good fuse/miniature circuit breaker (MCB) for your home there by protecting you from overload hazards and so on.

5.2 Switches

The switch is one of the most basic yet important electrical devise in the home. Although they almost all look the same once the face plate is on, they can function very differently.

Switches come in four major types:

- Single Pole
- Double Pole
- Three Way
- Four Way

5.2.1 Single Pole Switch

The single pole switch is the general purpose workhorse of switches. Single pole switches turn a light, receptacle or device on and off from a single location. A characteristic of a single pole toggle switch is that it has an **on** and **off** marking on the switch, something you will not find on a three or four way switch. Make sure

the switch is wired in the correct direction so the words "on" and "off" are facing correctly.

5.2.2 Double Pole Switch

The double pole switch also has "on" and "off" markings and functions similar to a single pole switch in that it turns something on and off from one location. However, because it has four brass terminals instead of two terminals it can handle switching two hot wires which allows it to switch a 240 volt circuit (or "220/221 whatever it takes)

5.2.3 Three Way Switch

The three way switch is always used in pairs and allows you to turn a light or receptacle on and off from two different locations. These switches have no "on" or "off" markings because the on and off positions will vary as the switches are used.

5.2.4 Four Way Switch

The four way switch is used in between two three-way switches to control an outlet or light fixture from three different locations. If you wanted to control from more than three locations, say five locations, you would still use two three-way switches (one on each end) but now you'd use three four-way switches in between the two three-ways.

CHAPTER-6-
CABLES

6.1 Busbars

Topside of firestop with penetrants consisting of electrical conduit on the left and a bus duct on the right. The firestop consists of firestop mortar on top and rockwool on the bottom, for a 2 hour fire-resistance rating.

For very heavy currents in electrical apparatus, and for heavy currents distributed through a building, bus bars can be used. Each live conductor of such a system is a rigid piece of copper or aluminum, usually in flat bars (but sometimes as tubing or other shapes). Open bus bars are never used in publicly accessible areas, although they are used in manufacturing plants and power company switch yards to gain the benefit of air cooling. A variation is to use heavy cables, especially where it is desirable to transpose or "roll" phases.

In industrial applications, conductor bars are assembled with insulators in grounded enclosures. This assembly, known as bus duct, can be used for connections to large switchgear or for bringing the main power feed into a building. A form of bus duct known as plug-in bus is used to distribute power down the length of a building; it is constructed to allow tap-off switches or motor controllers to be installed at definite places along the bus. The big advantage of this scheme is the ability to remove or add a branch circuit without removing voltage from the whole duct.

Bus ducts may have all phase conductors in the same enclosure (non-isolated bus), or may have each conductor separated by a grounded barrier from the adjacent phases (segregated bus). For conducting large currents between devices, a cable bus is used. For very large currents in generating stations or substations, where it is difficult to provide circuit protection, an isolated-phase bus is used. Each phase of the circuit is run in a separate grounded metal enclosure.

The only fault possible is a phase-to-ground fault, since the enclosures are separated. This type of bus can be rated up to 50,000 amperes and up to hundreds of kilovolts (during normal service, not just for faults), but is not used for building wiring in the conventional sense.

6.1.1 Busbar Systems Applications Advatages

- Busbars have compact structure. Placing of insulated/separated conductors in the housing provides compact structure. Busbar systems need less space than cable systems, especially for high ampere rates.
- Busbars have sheet metal body. This helps transferring the generated heat out through metal housing. Cooling is better than cable systems.
- Busbars can be applied to any kind of building by its modular structure. The design of busbar system can be changed in the future and/or moved to another building then installed again.
- Busbar systems have a modern and esthetic looking.
- Busbar systems do not burn, do not carry flames and do not generate poisonous (halogen, etc.) gas incase of fire. Cable systems can burn and enable fire to split out in the buildings (especially required in high-rise buildings and shopping centers).
- Busbar systems have no chimney effect, because of compact structure or pre-installedinner fire barriers.
- Busbar trunking systems have the advantage of expansions, changes, replacements and reusing capability in the future. According to the future needs, design of busbar system can be changed easily or fully/partially moved to another establishment.
- Installation time is much shorter than cable systems. This provides low installation and manpower costs and helps for better time management.
- With robust structure, short circuit stand is much higher than cable systems. (For example; for3000A busbar, 264 kA peak and 120kA/rms)

- Especially for high ampere rates, compact structure reduces the distance of conductor's axis and this reduces inductive reactance. Result of low resistance and impedance, voltage drop is much lower than cable.
- The compact structure and steel sheet housing allows much lower electromagnetic field around busbar system than cables. Data cables can safely install high current rated busbars near. Busbars do not generate electromagnetic interference on data system.
- Usually, more than one cable is used for the same phase connection, especially for high ampere rates. Busbar systems eliminate length differences between conductors and provide equal load on each line.
- Busbar systems are consisted of fully certified standard elements and designed to eliminate possible human mistakes. Such as tap off boxes/plugs are tested and certified parts of a busbar system and complies all safety requirements. Securities of all tap-off boxes are standard and does not change depend on the installer. Safeties of cable system's connections are depended on experiment of installer person.
- Busbars cannot be bitten and damaged by various animals, which may live in the buildings (rats, etc.). Because, housing is steel sheet and it is not delicious.

6.2 N2XH Halogen Free Cables

The cables are specified for stationary distribution of electrical energy in dry and damp premises. Suitable for hotels, hospitals, underground railways, airports etc to protect people and technical building equipment in the event of fire where there is no requirement for maintaining the function of the cable in the event of fire.

CHAPTER-7-

EARTHING

7.1 Definition of Earthing

The earth is made up of materials that is electrically conductive. A fault current will flow to 'earth' through the live conductor, provided it is earthed . This is to prevent a potentially live conductor from rising above the safe level . All exposed metal parts of an electrical installation or electrical appliance must be earthed .

The main objectives of the earthing are to :

1. Provide an alternative path for the fault current to flow so that it will not endanger the user
2. Ensure that all exposed conductive parts do not reach a dangerous potential
3. Maintain the voltage at any part of an electrical system at a known value so as to prevent over current or excessive voltage on the appliances or equipment

The qualities of a good earthing system are :

1. Must be of low electrical resistance
2. Must be of good corrosion resistance
3. Must be able to dissipate high fault current repeatedly

7.2 How The Safety Earth Works

The basic idea of an electrical safety earth (or ground) are pretty much the same everywhere. The case (chassis) of the equipment (and except for special situations, the internal electronics) is connected to an earth pin on the mains outlet.

This is then connected through the house wiring and switchboard to an electrically solid earth point, which is commonly a (copper) water pipe, or a stake buried deep into the ground.

Should a fault develop within the equipment that causes the active (live) conductor to come into contact with the chassis, the fault current will flow to earth, and the equipment or main switchboard fuse or circuit breaker will blow. This protects the user from electric shock, bypassing the dangerous current directly to earth, rather than through the body of the unsuspecting poor bastard who just touched it.

Earth leakage circuit breakers (RCD - residual current detectors - see below) measure the current in the active and neutral conductors. If these differ by more than a few milliamps, the circuit is disconnected. The principle is simple - if the current in the two wires differs, some of it must be going somewhere that is undesirable, so the supply is interrupted almost instantly. While these are mandatory in some countries (or under some circumstances), it is best not to rely on any advanced technique, but provide a system that is intrinsically safe - this is extremely difficult in reality.

There are exceptions to the basic earthed equipment method of protection. Some equipment is designated 'Double Insulated', and usually has a symbol of two concentric squares that indicates that the equipment is double insulated, and that an earth connection is not needed (or in some cases *must* not be used). The common plug-pack (wall-wart) power supply is nearly always double insulated, and such equipment has reinforced insulation, designed to ensure that it is not possible for the live AC connection to connect to the secondary electronics in any event - including a complete meltdown. The electrical safety tests to verify that a product meets the Double Insulation standards are rigorous and expensive, and are very difficult to meet with high powered equipment, and even more so when the equipment has a metal case. Nearly all power amplifiers (for example) are *not* double insulated, and require an earth connection.

CHAPTER-8-

COMPENSATION

8.1 Definition of Power Factor

The power factor of a load, which may be a single power-consuming item, or a number of items (for example an entire installation), is given by the ratio of P/S i.e.kW divided by kVA at any given moment.The value of a power factor will range from 0 to 1.If currents and voltages are perfectly sinusoidal signals, power factor equals cos □.A power factor close to unity means that the reactive energy is small compared with the active energy, while a low value of power factor indicates the opposite condition.

8.2 Power vector diagram

Active power P (in kW)

- Single phase (1 phase and neutral): P = V I cos □
- Single phase (phase to phase): P = U I cos □
- Three phase (3 wires or 3 wires + neutral): P = 3U I cos □

Reactive power Q (in kvar)

- Single phase (1 phase and neutral): P = V I sin □
- Single phase (phase to phase): Q = U I sin □
- Three phase (3 wires or 3 wires + neutral): P = 3 U I sin □

Apparent power S (in kVA)

- Single phase (1 phase and neutral): S = V I
- Single phase (phase to phase): S = U I
- Three phase (3 wires or 3 wires + neutral): P = 3 U I

where:

V = Voltage between phase and neutral

U = Voltage between phases

I = Line current

□ = Phase angle between vectors V and I.

- For balanced and near-balanced loads on 4-wire systems

8.3 Current and Voltage Vectors, and Derivation of The Power Diagram

The power "vector" diagram is a useful artifice, derived directly from the true rotating vector diagram of currents and voltage, as follows:

- The power-system voltages are taken as the reference quantities, and one phaseonly is considered on the assumption of balanced 3-phase loading.

- The reference phase voltage (V) is co-incident with the horizontal axis, and the current (I) of that phase will, for practically all power-system loads, lag the voltage byan angle □.

- The component of I which is in phase with V is the "wattful" component of I and is equal to I cos □, while VI cos □ equals the active power (in kW) in the circuit, if V is expressed in kV.

- The component of I which lags 90 degrees behind V is the wattless component of I and is equal to I sin □, while VI sin □ equals the reactive power (in kvar) in the circuit, if V is expressed in kV.

- If the vector I is multiplied by V, expressed in kV, then VI equals the apparent power(in kVA) for the circuit.
- The simple formula is obtained: S2 = P2 + Q2

- The above kW, kvar and kVA values per phase, when multiplied by 3, can therefore conveniently represent the relationships of kVA, kW, kvar and power factor for a total 3-phase load(as shown in figure 8.1)

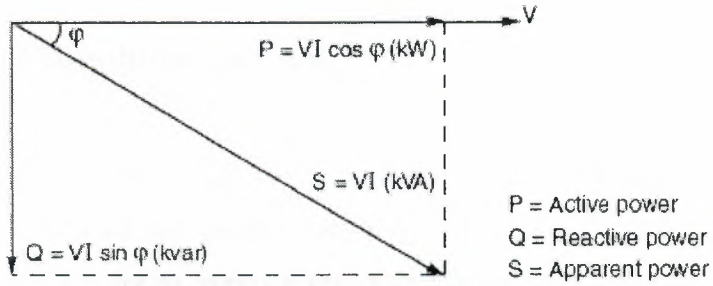

Figure 8.1

8.4 How to Decide The Optimum Level of Compensation?

8.4.1 General method

A. Listing of reactive power demands at the design stage

This listing can be made in the same way (and at the same time) as that for the power loading described in chapter A. The levels of active and reactive power loading, at each level of the installation (generally at points of distribution and subdistribution of circuits) can then be determined.

B. Technical-economic optimization for an existing installation

- The optimum rating of compensation capacitors for an existing installation can be determined from the following principal considerations:
- Electricity bills prior to the installation of capacitors
- Future electricity bills anticipated following the installation of capacitors
- Costs of:
  - Purchase of capacitors and control equipment (contactors, relaying, cabinets, etc.)

- Installation and maintenance costs
- Cost of dielectric heating losses in the capacitors, versus reduced losses in cables, transformer, etc., following the installation of capacitors

8.4.2 Simplified method

An approximate calculation is generally adequate for most practical cases, and maybe based on the assumption of a power factor of 0.8 (lagging) before compensation.In order to improve the power factor to a value sufficient to avoid tariff penalties (thisdepends on local tariff structures, but is assumed here to be 0.93) and to reduce losses, volt-drops, etc. in the installation, reference can be made to next page.

From the figure, it can be seen that, to raise the power factor of the installation from 0.8 to 0.93 will require 0.355 kvar per kW of load. The rating of a bank of capacitors at the busbars of the main distribution board of the installation would be Q (kvar) = 0.355 x P (kW).

This simple approach allows a rapid determination of the compensation capacitors required, albeit in the global, partial or independent mode.

Example

It is required to improve the power factor of a 666 kVA installation from 0.75 to 0.928. The active power demand is 666 x 0.75 = 499.5 kW.
the intersection of the row cos □ = 0.75 (before correction) with
the column cos □ = 0.93 (after correction) indicates a value of 0.487 kvar of compensation per kW of load.

For a load of 500 kW, therefore, 500 x 0.487 = 244 kvar of capacitive compensationis required.

Note: this method is valid for any voltage level, i.e. is independent of voltage.

8.5 Global Compensation

The capacitor bank is connected to the busbars of the main distribution board for the installation(as shown figure 8.2) , and remains in service during the period of normal load.

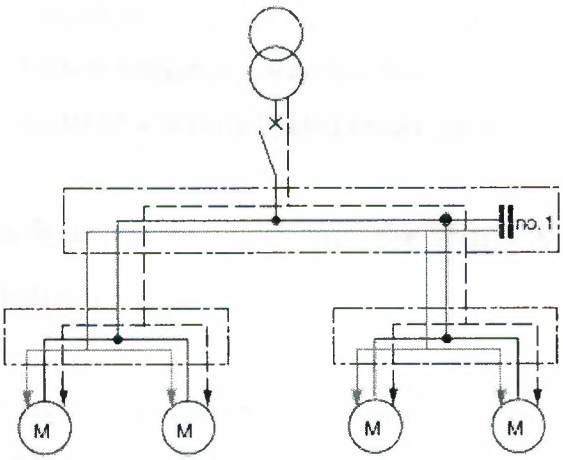

Figure 8.2

Advantages

The global type of compensation:

- Reduces the tariff penalties for excessive consumption of kVARs
- Reduces the apparent power kVA demand, on which standing charges are usually based
- Relieves the supply transformer, which is then able to accept more load if necessary

Comments

- Reactive current still flows in all conductors of cables leaving (i.e. downstream of) the main LV distribution board

- For the above reason, the sizing of these cables, and power losses in them, are not improved by the global mode of compensation.

8.6 Automatic Capacitor Banks

This kind of equipment provides automatic control of compensation, maintaining thepower factor within close limits around a selected level. Such equipment is applied at points in an installation where the active-power and/or reactive-power variations are relatively large, for example:

- At the busbars of a general power distribution board
- At the terminals of a heavily-loaded feeder cable

8.6.1 The Principles of, and Reasons, for Using Automatic Compensation

A bank of capacitors is divided into a number of sections, each of which is controlled by a contactor. Closure of a contactor switches its section into parallel operation withother sections already in service. The size of the bank can therefore be increased or decreased in steps, by the closure and opening of the controlling contactors. A control relay monitors the power factor of the controlled circuit(s) and is arranged to close and open appropriate contactors to maintain a reasonably constant system power factor (within the tolerance imposed by the size of each step of compensation). The current transformer for the monitoring relay must evidently be placed on one phase of the incoming cable which supplies the circuit(s) being controlled(as shown in figure 8.3).

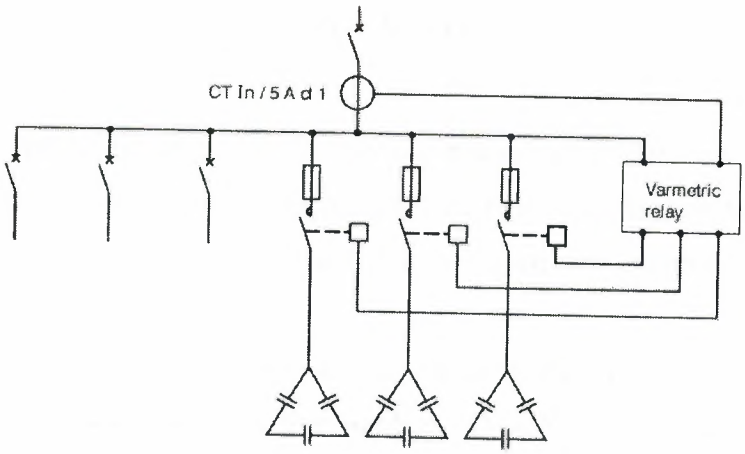

Figure 8.3

A Varset Fast capacitor bank is an automatic power factor correction equipment including static contactors (thyristors) instead of usual contactors. Static correction is particularly suitable for a certain number of installations using equipment with fast cycle and/or sensitive to transient surges.

The advantages of static contactors are :

- Immediate response to all power factor fluctuation (response time 2 s or 40 ms according to regulator option)
- Unlimited number of operations
- Elimination of transient phenomena on the network on capacitor switching
- Fully silent operation
- By closely matching compensation to that required by the load, the possibility of producing overvoltages at times of low load will be avoided, thereby preventing an overvoltage condition, and possible damage to appliances and equipment.
- Over voltages due to excessive reactive compensation depend partly on the value of source impedance.

CONCLUSION

It is important to choose the proper materials or elements in building installation and project. (The materials, such as fuse, socket, switch, cable, and conduit are used). In what condition and where they are used are investigated.

If electrical installation does not wire properly, then it can cause the fire or it can damage whole cables in the building. Therefore, electrician should be careful while drowning the electrical installation project. The project must be suitable for Turkish standard.

The Electrical Installation Project bases on how installation should be; what is paid attention in drowning the project and how it should be drowned.

(The materials used by electrician in grounding).

It is better to choose proper materials used in grounding by electrician and they should be convenient for Turkish standard institute.

This project helps us to obtain information about calculation how we make according to what rules and the importance of grounding for human life, and we get detail information on the characteristics of materials which are used in buildings.

REFERENCES

[1] Schneider Electric Installation Handbook'http://www.schneider-electric.com.tr

[2] http://www.neon-lighting.com/articles/TypesofLamps.html

[3] http://mysite.du.edu/jcalvert/optics/lumens.htm

[4] http://homerepair.about.com/od/electricalrepair/ss/switch_types_5.htm

[5] http://www.emo.org.tr

[6] http://www.ktemo.org.tr

[7] http://library.thinkquest.org/C0121286/earthing.htm

[8] http://hyperphysics.phy-astr.gsu.edu/hbase/electric/conins.html

[9] http://www.hitechcontrols.com/cables/halogen_free_security_cables/installation/n2xh.html

[10] http://www.st-andrews.ac.uk/~www_pa/Scots_Guide/audio/part6/page1.html

ILLUMINATION CALCUATION		
EQUATION	**SYMBOLS**	**DEFINITION**
$k = \frac{A \times B}{(A + B) \times H}$	k	Room index
	A	Width of the room (m)
	B	Length of the room (m)
	H	Height of the armature from the working plane (m)
	h	Height of the room (m)
	h_1	Height of the working plane (m)
$Ø_T = \frac{E \times S \times \mu}{\eta}$	$Ø_T$	Total required flux (lm)
	E	The illumination level (lux)
	S	The area to be illuminated (m^2)
	d	The dirty factor of the room
	η	The room efficiency
$N = \frac{Ø_T}{Ø_A \times Z}$	N	Number of the armature to be used
	$Ø_L$	The armature flux (lm)
	Z	Number of the lamps on the armature

KNOWN DATA			
Room Dimensions	Dirty Factor	Illumination Level	
A=(m)	Ceiling:0.80	E=(lux)	
B=(m)	Walls:0.50	From table	
H=(m)	Floor:0.30		

CALCULATION				
STEPS	**FIND**	**EQUATION**	**CALCULATION**	**RESULT**
1.	H	H=h−h_1	H=4.50−1.00	H=3.50 m
2.	k	$k = \frac{A \times B}{(A + B) \times H}$	$k = \frac{A \times B}{(A + B) \times H}$	k=
3.	η	Efficiency factor from table		η=
4.	μ	Dirty factor from table		d=0.85
5.	S	S= A × B	S= A × B	S= (m^2)
6.	$Ø_T$	$Ø_T = \frac{E \times S \times \mu}{\eta}$	$Ø_T = \frac{E \times S \times \mu}{\eta}$	$Ø_T$= (lm)
7.	N	$N = \frac{Ø_T}{Ø_A \times Z}$	$N = \frac{Ø_T}{Ø_A \times Z}$	N

A1 BLOCK	ROOM NAME	A	B	E	k	η	ΦT	L Types	ΦL	Z	N
A1-3B14	Interrogation Room	10	8	350	1,26984127	0,38	86687,3065	Ö-4X14W	1750	4	12,3839
A1-3B15	Judicial Register Chief Room	7	4	200	0,727272727	0,29	22718,0527	Ö-4X14W	1750	4	3,24544
A1-3B16	Judicial Register Clerical Office	7	7	250	1	0,36	40032,6797	Ö-4X14W	1750	4	5,71895
A1-3B17	Interrogation Room	10	8	350	1,26984127	0,38	86687,3065	Ö-4X14W	1750	4	12,3839
A1-3B27	Preperation Room	7	5	100	0,833333333	0,32	12867,6471	P1-2x36W	2350	2	2,7378
A1-3B29	Preperation Room	7	5	100	0,833333333	0,32	12867,6471	P1-2x36W	2350	2	2,7378
A2 BLOCK	**ROOM NAME**	**A**	**B**	**E**	**k**	η	ΦT	**L Types**	ΦL	**Z**	**N**
A2-3B01	Resting Room	6	3	100	0,571428571	0,24	8823,52941	ATY2-4x18W	1350	4	1,63399
A1 BLOCK	**ROOM NAME**	**A**	**B**	**E**	**k**	η	ΦT	**L Types**	ΦL	**Z**	**N**
B1-3B05	Lawyer Dinning Hall	11	5,5	200	1,047619048	0,37	38473,7679	Ö-4X14W	1750	4	5,49625
C1 BLOCK	**ROOM NAME**	**A**	**B**	**E**	**k**	η	ΦT	**L Types**	ΦL	**Z**	**N**
C1-3B02	Registration Room	7	5	250	0,833333333	0,33	31194,2959	Ö-4X14W	1750	4	4,45633
C1-3B03	Aplication Attorney Clerical	6	5	250	0,779220779	0,3	29411,7647	Ö-4X14W	1750	4	4,20168
C1-3B07	Police Station	8	7,5	250	1,105990783	0,36	49019,6078	Ö-4X14W	1750	4	7,0028
C1-3B08	Superior Room	5	3	200	0,535714286	0,25	14117,6471	Ö-4X14W	1750	4	2,01681
C1-3B15	Reference Attorney General	6	3,5	250	0,631578947	0,28	22058,8235	Ö-4X14W	1750	4	3,15126
C1-3B16	Reference Attorney General	6	3,5	250	0,631578947	0,28	22058,8235	Ö-4X14W	1750	4	3,15126
C1-3B17	Reference Attorney General	6	3,5	250	0,631578947	0,28	22058,8235	Ö-4X14W	1750	4	3,15126
C1-3B18	Reference Attorney General	6	3,5	250	0,631578947	0,28	22058,8235	Ö-4X14W	1750	4	3,15126
C1-3B19	Reference Attorney General	6	3,5	250	0,631578947	0,28	22058,8235	Ö-4X14W	1750	4	3,15126
C1-3B20	Reference Attorney General	6	3,5	250	0,631578947	0,28	22058,8235	Ö-4X14W	1750	4	3,15126
C1-3B26	Reference Attorney Clerical	7	6	250	0,923076923	0,32	38602,9412	Ö-4X14W	1750	4	5,51471
C1-3B27	Reference Attorney Clerical	10	7	250	1,176470588	0,37	55643,8792	Ö-4X14W	1750	4	7,94913
C1-3B28	Judicial Doctor	6	3,5	200	0,631578947	0,27	18300,6536	Ö-4X14W	1750	4	2,61438
C1-3B29	Judicial Inspection	6	3,5	200	0,631578947	0,27	18300,6536	Ö-4X14W	1750	4	2,61438
C1-3B30	Judicial Inspection Clerical	6	3,5	250	0,631578947	0,27	22875,817	Ö-4X14W	1750	4	3,26797

C1 BLOCK	ROOM NAME	A	B	E	k	η	ΦT	L Types	ΦL	Z	N
C1-3B31	Execution Attorney General	6	3,5	250	0,631578947	0,27	22875,817	Ö-4X14W	1750	4	3,26797
C1-3B32	Execution Attorney General	6	3,5	250	0,631578947	0,27	22875,817	Ö-4X14W	1750	4	3,26797
C1-3B33	Execution Attorney General	6	3,5	250	0,631578947	0,27	22875,817	Ö-4X14W	1750	4	3,26797
C1-3B34	Execution Attorney Clerical	7	6	250	0,923076923	0,34	36332,1799	Ö-4X14W	1750	4	5,19031
C1-3B35	Pay-Office	6	3,5	200	0,631578947	0,25	19764,7059	Ö-4X14W	1750	4	2,82353
C1-3B36	Execution Attorney Clerical	7	6	250	0,923076923	0,34	36332,1799	Ö-4X14W	1750	4	5,19031
C1-3B37	Execution Attorney General	6	3,5	250	0,631578947	0,29	21298,1744	Ö-4X14W	1750	4	3,0426
C1-3B38	Execution Attorney General	6	3,5	250	0,631578947	0,29	21298,1744	Ö-4X14W	1750	4	3,0426
C1-3B39	Execution Attorney General	6	3,5	250	0,631578947	0,29	21298,1744	Ö-4X14W	1750	4	3,0426
C1-3B56	Execution Attorney Clerical	7	6	250	0,923076923	0,29	42596,3489	Ö-4X14W	1750	4	6,08519
C1-3B57	Execution Attorney Clerical	7	6	250	0,923076923	0,29	42596,3489	Ö-4X14W	1750	4	6,08519
C1-3B58	Execution Attorney Clerical	7	6	250	0,923076923	0,29	42596,3489	Ö-4X14W	1750	4	6,08519
C1-3B59	Execution Attorney Clerical	7	6	250	0,923076923	0,29	42596,3489	Ö-4X14W	1750	4	6,08519
C3 BLOCK	**ROOM NAME**	**A**	**B**	**E**	**k**	η	ΦT	**L Types**	ΦL	**Z**	**N**
C3-3B03	Sale Room	8	4	300	0,761904762	0,27	41830,0654	Ö-4X14W	1750	4	5,97572
C3-3B04	Sale Room	8	4	300	0,761904762	0,27	41830,0654	Ö-4X14W	1750	4	5,97572
C3-3B05	Sale Room	8	4	300	0,761904762	0,27	41830,0654	Ö-4X14W	1750	4	5,97572
C3-3B12	Meeting Room	6	5,5	250	0,819875776	0,31	31309,2979	Ö-4X14W	1750	4	4,47276
C3-3B13	Judge Interrogation Room	6	3,5	200	0,631578947	0,25	19764,7059	Ö-4X14W	1750	4	2,82353
C3-3B14	Judge on Duty	6	3,5	200	0,631578947	0,25	19764,7059	Ö-4X14W	1750	4	2,82353
C3-3B15	Judge Interrogation Room	6	3,5	200	0,631578947	0,25	19764,7059	Ö-4X14W	1750	4	2,82353
C3-3B16	Judge on Duty	6	3,5	200	0,631578947	0,25	19764,7059	Ö-4X14W	1750	4	2,82353
C3-3B17	Judge on Duty	6	3,5	200	0,631578947	0,25	19764,7059	Ö-4X14W	1750	4	2,82353
C3-3B18	Judge Interrogation Room	6	5	200	0,779220779	0,29	24340,7708	Ö-4X14W	1750	4	3,47725
C3-3B24	Judge on Duty Clerical Office	7	6,5	250	0,962962963	0,34	39359,8616	Ö-4X14W	1750	4	5,62284
C3-3B25	Judge on Duty Clerical Office	10	7	250	1,176470588	0,36	57189,5425	Ö-4X14W	1750	4	8,16993
C3-3B26	Judge on Duty Clerical Office	7	3,5	250	0,666666667	0,28	25735,2941	Ö-4X14W	1750	4	3,67647
C3-3B27	Attorney Generalship Clerical Office	7	6	250	0,923076923	0,33	37433,1551	Ö-4X14W	1750	4	5,34759
C3-3B28	Attorney General on Duty Room	6	3,5	200	0,631578947	0,25	19764,7059	Ö-4X14W	1750	4	2,82353
C3-3B29	Attorney General on Duty Room	6	3,5	200	0,631578947	0,25	19764,7059	Ö-4X14W	1750	4	2,82353
C3-3B30	Attorney General on Duty Room	6	3,5	200	0,631578947	0,25	19764,7059	Ö-4X14W	1750	4	2,82353

C3 BLOCK	ROOM NAME	A	B	E	k	η	ΦT	L Types	ΦL	Z	N
C3-3B31	Attorney General on Duty Room	6	3,5	200	0,631578947	0,25	19764,7059	Ö-4X14W	1750	4	2,82353
C3-3B32	Attorney General on Duty Room	6	3,5	200	0,631578947	0,26	19004,5249	Ö-4X14W	1750	4	2,71493
C3-3B33	Attorney General on Duty Room	6	3,5	200	0,631578947	0,26	19004,5249	Ö-4X14W	1750	4	2,71493
C3-3B34	Judicial Doctor and Inspection	6	3,5	150	0,631578947	0,26	14253,3937	Ö-4X14W	1750	4	2,0362
C3-3B35	Judicial Doctor and Inspection	6	3,5	150	0,631578947	0,26	14253,3937	Ö-4X14W	1750	4	2,0362
C3-3B36	Judicial Doctor and Inspection	6	3,5	150	0,631578947	0,26	14253,3937	Ö-4X14W	1750	4	2,0362
C3-3B37	Judicial Doctor and Inspection	6	3,5	150	0,631578947	0,26	14253,3937	Ö-4X14W	1750	4	2,0362
C3-3B38	Judicial Doctor and Inspection	6	3,5	150	0,631578947	0,26	14253,3937	Ö-4X14W	1750	4	2,0362
C3-3B48	Sale Room	8	4	300	0,761904762	0,28	40336,1345	Ö-4X14W	1750	4	5,7623
C3-3B49	Sale Room	8	4	300	0,761904762	0,28	40336,1345	Ö-4X14W	1750	4	5,7623
C3-3B50	Sale Room	8	4	300	0,761904762	0,28	40336,1345	Ö-4X14W	1750	4	5,7623
C3-3B52	Judicial Doctor Pay-Office	6	3	200	0,571428571	0,25	16941,1765	Ö-4X14W	1750	4	2,42017
C3-3B53	Judicial Doctor Clerical Office	7	6	250	0,923076923	0,31	39848,1973	Ö-4X14W	1750	4	5,6926
C3-3B54	Judicial Doctor Clerical Office	7,5	3,5	250	0,681818182	0,29	26622,7181	Ö-4X14W	1750	4	3,80325
D1 BLOCK	**ROOM NAME**	**A**	**B**	**E**	**k**	η	ΦT	**L Types**	ΦL	**Z**	**N**
D1-3B05	Lawyer Dinning Hall	11	5,5	200	1,047619048	0,37	38473,7679	Ö-4X14W	1750	4	5,49625
A1 BLOCK	ROOM NAME	A	B	E	k	η	ΦT	L Types	ΦL	Z	N
A1-Z04	people cafeteria	27,6	23	300	3,584415584	0,61	367290,26	Ö-4X14W	1750	4	52,47
A1-Z19	Central	3,2	6,1	200	0,59969278	0,25	18371,7647	ATY2-4x18W	1350	4	3,40218
A1-Z20	pay room	7	9	250	1,125	0,38	48761,6099	Ö-4X14W	1750	4	6,96594
A1-Z21	necessities clerical office	14	3,4	200	0,781609195	0,3	37333,3333	Ö-4X14W	1750	4	5,33333
A1-Z25	movables civil servant	3,3	3,4	200	0,478464819	0,26	10153,8462	Ö-4X14W	1750	4	1,45055
A1-Z26	chancellery director assistant	3,3	6,2	200	0,615338346	0,24	20058,8235	Ö-4X14W	1750	4	2,86555
A1-Z27	director assistant	3,3	6,2	200	0,615338346	0,24	20058,8235	Ö-4X14W	1750	4	2,86555
A1-Z28	director assistant	3,3	6,2	200	0,615338346	0,24	20058,8235	Ö-4X14W	1750	4	2,86555
B1 BLOCK	ROOM NAME	A	B	E	k	η	ΦT	L Types	ΦL	Z	N
B1-Z05	Lawyer resting Hall	12	5,1	200	1,022556391	0,36	40000	Ö-4x14W	1750	4	5,71429

B2 BLOCK	ROOM NAME	A	B	E	k	η	ΦT	L Types	ΦL	Z	N
B2-Z02	Law execution sage room	3,4	6,15	200	0,625579656	0,24	20500	Ö-4x14W	1750	4	2,92857
B2-Z03	Law execution sage clerical room	6,5	6,15	200	0,902879729	0,32	29393,3824	Ö-4x14W	1750	4	4,19905
B2-Z03	Director	3,8	2,7	200	0,450989011	0,22	10973,262	Ö-4x14W	1750	4	1,56761
B2-Z04	Director	3,8	2,7	200	0,450989011	0,22	10973,262	Ö-4x14W	1750	4	1,56761
B2-Z04	Law execution sage clerical room	6,5	6,15	200	0,902879729	0,32	29393,3824	Ö-4x14W	1750	4	4,19905
B2-Z05	Law execution sage room	3,4	6,15	200	0,625579656	0,24	20500	Ö-4x14W	1750	4	2,92857
B2-Z06	Law execution sage room	3,4	6,15	200	0,625579656	0,24	20500	Ö-4x14W	1750	4	2,92857
B2-Z07	Law execution sage clerical room	6,5	6,15	200	0,902879729	0,32	29393,3824	Ö-4x14W	1750	4	4,19905
B2-Z08	Law execution sage clerical room	6,5	6,15	200	0,902879729	0,32	29393,3824	Ö-4x14W	1750	4	4,19905
B2-Z09	Law execution sage room	3,4	6,15	200	0,625579656	0,24	20500	Ö-4x14W	1750	4	2,92857
B2-Z10	Lawyer resting Hall	7	9	250	1,125	0,38	48761,6099	Ö-4X14W	1750	4	6,96594
B2-Z11	Law execution sage hearing room	7,8	5,5	250	0,921589689	0,31	40702,0873	Ö-4x14W	1750	4	5,81458
B2 BLOCK	ROOM NAME	A	B	E	k	η	ΦT	L Types	ΦL	Z	N
B2-Z11	Law execution sage hearing room	7,8	5,5	250	0,921589689	0,31	40702,0873	Ö-4x14W	1750	4	5,81458
B2-Z14	Law execution sage hearing room	7,8	5,5	250	0,921589689	0,31	40702,0873	Ö-4x14W	1750	4	5,81458
B2-Z15	Law execution sage hearing room	7,8	5,5	250	0,921589689	0,31	40702,0873	Ö-4x14W	1750	4	5,81458
B2-Z18	Law execution sage hearing room	7,8	5,5	250	0,921589689	0,31	40702,0873	Ö-4x14W	1750	4	5,81458
B2-Z21	Law execution sage hearing room	7,8	5,5	250	0,921589689	0,31	40702,0873	Ö-4x14W	1750	4	5,81458
B2-Z24	Law execution sage hearing room	7,8	5,5	250	0,921589689	0,31	40702,0873	Ö-4x14W	1750	4	5,81458
B2-Z25	Law execution sage hearing room	7,8	5,5	250	0,921589689	0,31	40702,0873	Ö-4x14W	1750	4	5,81458
B2-Z28	Law execution sage hearing room	7,8	5,5	250	0,921589689	0,31	40702,0873	Ö-4x14W	1750	4	5,81458
B2-Z29	Law execution sage hearing room	7,8	5,5	250	0,921589689	0,31	40702,0873	Ö-4x14W	1750	4	5,81458
B2-Z32	Law execution sage hearing room	7,8	5,5	250	0,921589689	0,31	40702,0873	Ö-4x14W	1750	4	5,81458
B2-Z35	Law execution sage room	3,4	6,15	200	0,625579656	0,24	20500	Ö-4x14W	1750	4	2,92857
B2-Z36	Law execution sage clerical room	6,5	6,15	200	0,902879729	0,32	29393,3824	Ö-4x14W	1750	4	4,19905
B2-Z36	Director	3,8	2,7	200	0,450989011	0,22	10973,262	Ö-4x14W	1750	4	1,56761
B2-Z37	Law execution sage clerical room	6,5	6,15	200	0,902879729	0,32	29393,3824	Ö-4x14W	1750	4	4,19905
B2-Z37	Director	3,8	2,7	200	0,450989011	0,22	10973,262	Ö-4x14W	1750	4	1,56761
B2-Z38	Law execution sage room	3,4	6,15	200	0,625579656	0,24	20500	Ö-4x14W	1750	4	2,92857
B2-Z39	Law execution sage room	3,4	6,15	200	0,625579656	0,24	20500	Ö-4x14W	1750	4	2,92857
B2-Z40	Law execution sage clerical room	6,5	6,15	200	0,902879729	0,32	29393,3824	Ö-4x14W	1750	4	4,19905
B2-Z40	Director	3,8	2,7	200	0,450989011	0,22	10973,262	Ö-4x14W	1750	4	1,56761

B2 BLOCK	ROOM NAME	A	B	E	k	η	ΦT	L Types	ΦL	Z	N
B2-Z41	Law execution sage clerical room	6,5	6,15	200	0,902879729	0,32	29393,3824	Ö-4x14W	1750	4	4,19905
B2-Z41	Director	3,8	2,7	200	0,450989011	0,22	10973,262	Ö-4x14W	1750	4	1,56761
B2-Z42	Law execution sage room	3,4	6,15	200	0,625579656	0,24	20500	Ö-4x14W	1750	4	2,92857
B2-Z43	Law execution sage room	3,4	6,15	200	0,625579656	0,24	20500	Ö-4x14W	1750	4	2,92857
B2-Z44	Law execution sage clerical room	6,5	6,15	200	0,902879729	0,32	29393,3824	Ö-4x14W	1750	4	4,19905
B2-Z44	Director	3,8	2,7	200	0,450989011	0,22	10973,262	Ö-4x14W	1750	4	1,56761
B2-Z45	Law execution sage clerical room	6,5	6,15	200	0,902879729	0,32	29393,3824	Ö-4x14W	1750	4	4,19905
B2 BLOCK	ROOM NAME	A	B	E	k	η	ΦT	L Types	ΦL	Z	N
B2-Z45	Director	3,8	2,7	200	0,450989011	0,22	10973,262	Ö-4x14W	1750	4	1,56761
B2-Z46	Law execution sage room	3,4	6,15	200	0,625579656	0,24	20500	Ö-4x14W	1750	4	2,92857
B3 BLOCK	**ROOM NAME**	**A**	**B**	**E**	**k**	η	ΦT	**L Types**	ΦL	**Z**	**N**
B3-Z07	Law execution sage room	3,4	6,15	200	0,625579656	0,24	20500	Ö-4x14W	1750	4	2,92857
B3-Z08	Law execution sage clerical room	6,5	6,15	200	0,902879729	0,32	29393,3824	Ö-4x14W	1750	4	4,19905
B3-Z08	Director	3,8	2,7	200	0,450989011	0,22	10973,262	Ö-4x14W	1750	4	1,56761
B3-Z09	Law execution sage clerical room	6,5	6,15	200	0,902879729	0,32	29393,3824	Ö-4x14W	1750	4	4,19905
B3-Z09	Director	3,8	2,7	200	0,450989011	0,22	10973,262	Ö-4x14W	1750	4	1,56761
B3-Z10	Law execution sage room	3,4	6,15	200	0,625579656	0,24	20500	Ö-4x14W	1750	4	2,92857
B3-Z11	family Law sage room	3,4	6,15	200	0,625579656	0,24	20500	Ö-4x14W	1750	4	2,92857
B3-Z12	Law execution sage clerical room	6,5	6,15	200	0,902879729	0,32	29393,3824	Ö-4x14W	1750	4	4,19905
B3-Z12	Director	3,8	2,7	200	0,450989011	0,22	10973,262	Ö-4x14W	1750	4	1,56761
B3-Z13	family law sage clerical room	6,5	6,15	200	0,902879729	0,32	29393,3824	Ö-4x14W	1750	4	4,19905
B3-Z13	Director	3,8	2,7	200	0,450989011	0,22	10973,262	Ö-4x14W	1750	4	1,56761
B3-Z14	family Law sage room	3,4	6,15	200	0,625579656	0,24	20500	Ö-4x14W	1750	4	2,92857
B3-Z15	family Law sage room	3,4	6,15	200	0,625579656	0,24	20500	Ö-4x14W	1750	4	2,92857
B3-Z16	family law sage clerical room	6,5	6,15	200	0,902879729	0,32	29393,3824	Ö-4x14W	1750	4	4,19905
B3-Z16	Director	3,8	2,7	200	0,450989011	0,22	10973,262	Ö-4x14W	1750	4	1,56761
B3-Z17	family law sage clerical room	6,5	6,15	200	0,902879729	0,32	29393,3824	Ö-4x14W	1750	4	4,19905
B3-Z17	Director	3,8	2,7	200	0,450989011	0,22	10973,262	Ö-4x14W	1750	4	1,56761
B3-Z18	family Law sage room	3,4	6,15	200	0,625579656	0,24	20500	Ö-4x14W	1750	4	2,92857
B3-Z23	family Law hearing room	7,8	5,5	250	0,921589689	0,31	40702,0873	Ö-4x14W	1750	4	5,81458
B3-Z26	family Law hearing room	7,8	5,5	250	0,921589689	0,31	40702,0873	Ö-4x14W	1750	4	5,81458
B3-Z27	family Law hearing room	7,8	5,5	250	0,921589689	0,31	40702,0873	Ö-4x14W	1750	4	5,81458

B3 BLOCK	ROOM NAME	A	B	E	k	η	ΦT	L Types	ΦL	Z	N
B3-Z30	family Law hearing room	7,8	5,5	250	0,921589689	0,31	40702,0873	Ö-4x14W	1750	4	5,81458
B3-Z31	Law execution sage hearing room	7,8	5,5	250	0,921589689	0,31	40702,0873	Ö-4x14W	1750	4	5,81458
B3-Z34	Law execution sage hearing room	7,8	5,5	250	0,921589689	0,31	40702,0873	Ö-4x14W	1750	4	5,81458
B3-Z37	Pedegog	4,2	3,5	200	0,545454545	0,23	15038,3632	Ö-4X14W	1750	4	2,14834
B3-Z38	psycholog	4,2	3,5	200	0,545454545	0,23	15038,3632	Ö-4X14W	1750	4	2,14834
B3-Z39	psycholog	4,2	3,5	200	0,545454545	0,23	15038,3632	Ö-4X14W	1750	4	2,14834
B3-Z40	Pedegog	4,2	3,5	200	0,545454545	0,23	15038,3632	Ö-4X14W	1750	4	2,14834
B3-Z41	social services	4,2	3,5	200	0,545454545	0,23	15038,3632	Ö-4X14W	1750	4	2,14834
B3-Z42	social services	4,2	3,5	200	0,545454545	0,23	15038,3632	Ö-4X14W	1750	4	2,14834
B3-Z43	Pedegog	4,2	3,5	200	0,545454545	0,23	15038,3632	Ö-4X14W	1750	4	2,14834
B3-Z44	psycholog	4,2	3,5	200	0,545454545	0,23	15038,3632	Ö-4X14W	1750	4	2,14834
B3-Z45	psycholog	4,2	3,5	200	0,545454545	0,23	15038,3632	Ö-4X14W	1750	4	2,14834
B3-Z46	Pedegog	4,2	3,5	200	0,545454545	0,23	15038,3632	Ö-4X14W	1750	4	2,14834
B3-Z47	social services	4,2	3,5	200	0,545454545	0,23	15038,3632	Ö-4X14W	1750	4	2,14834
C1 BLOCK	ROOM NAME	A	B	E	k	η	ΦT	L Types	ΦL	Z	N
C1-Z02	criminal court hearing room	13	8	250	1,414965986	0,37	82670,9062	Ö-4X14W	1750	4	11,8101
C1-Z03	criminal court hearing room	13	8	250	1,414965986	0,37	82670,9062	Ö-4X14W	1750	4	11,8101
C1-Z04	criminal court hearing room	13	8	250	1,414965986	0,37	82670,9062	Ö-4X14W	1750	4	11,8101
C1-Z05	criminal court hearing room	13	8	250	1,414965986	0,37	82670,9062	Ö-4X14W	1750	4	11,8101
C1-Z08	discussion	3,65	2,5	200	0,423925668	0,22	9759,35829	Ö-4x14W	1750	4	1,39419
C1-Z17	discussion	3,65	2,5	200	0,423925668	0,22	9759,35829	Ö-4x14W	1750	4	1,39419
C1-Z19	discussion	3,65	2,5	200	0,423925668	0,22	9759,35829	Ö-4x14W	1750	4	1,39419
C1-Z28	discussion	3,65	2,5	200	0,423925668	0,22	9759,35829	Ö-4x14W	1750	4	1,39419
C1-Z30	criminal court member room	3,4	6,15	200	0,625579656	0,24	20500	Ö-4x14W	1750	4	2,92857
C1-Z31	criminal court president	7,5	5,9	250	0,943496802	0,32	40670,9559	Ö-4x14W	1750	4	5,81014
C1-Z32	criminal court clerical	7,5	5,9	250	0,943496802	0,32	40670,9559	Ö-4x14W	1750	4	5,81014
C1 BLOCK	ROOM NAME	A	B	E	k	η	ΦT	L Types	ΦL	Z	N
C1-Z33	criminal court member room	3,4	6,15	200	0,625579656	0,24	20500	Ö-4x14W	1750	4	2,92857
C1-Z41	criminal court president	7,5	5,9	250	0,943496802	0,32	40670,9559	Ö-4x14W	1750	4	5,81014
C1-Z42	criminal court clerical	7,5	5,9	250	0,943496802	0,32	40670,9559	Ö-4x14W	1750	4	5,81014
C1-Z43	criminal court member room	3,4	6,15	200	0,625579656	0,24	20500	Ö-4x14W	1750	4	2,92857
C1-Z44	criminal court member room	3,4	6,15	200	0,625579656	0,24	20500	Ö-4x14W	1750	4	2,92857

C1 BLOCK	ROOM NAME	A	B	E	k	η	ΦT	L Types	ΦL	Z	N
C1-Z45	criminal court member room	3,4	6,15	200	0,625579656	0,24	20500	Ö-4x14W	1750	4	2,92857
C1-Z46	criminal court member room	3,4	6,15	200	0,625579656	0,24	20500	Ö-4x14W	1750	4	2,92857
C1-Z47	criminal court president	7,5	5,9	250	0,943496802	0,32	40670,9559	Ö-4x14W	1750	4	5,81014
C1-Z48	criminal court clerical	7,5	5,9	250	0,943496802	0,32	40670,9559	Ö-4x14W	1750	4	5,81014
C1-Z49	criminal court clerical	7,5	5,9	250	0,943496802	0,32	40670,9559	Ö-4x14W	1750	4	5,81014
C1-Z50	criminal court president	7,5	5,9	250	0,943496802	0,32	40670,9559	Ö-4x14W	1750	4	5,81014
C1-Z51	criminal court member room	3,4	6,15	200	0,625579656	0,24	20500	Ö-4x14W	1750	4	2,92857
C1-Z52	criminal court member room	3,4	6,15	200	0,625579656	0,24	20500	Ö-4x14W	1750	4	2,92857
C3 BLOCK	ROOM NAME	A	B	E	k	η	ΦT	L Types	ΦL	Z	N
C3-Z02	criminal court hearing room	13	8	250	1,414965986	0,37	82670,9062	Ö-4X14W	1750	4	11,8101
C3-Z03	criminal court hearing room	13	8	250	1,414965986	0,37	82670,9062	Ö-4X14W	1750	4	11,8101
C3-Z04	criminal court hearing room	13	8	250	1,414965986	0,37	82670,9062	Ö-4X14W	1750	4	11,8101
C3-Z05	criminal court hearing room	13	8	250	1,414965986	0,37	82670,9062	Ö-4X14W	1750	4	11,8101
C3-Z08	discussion	3,65	2,5	200	0,423925668	0,22	9759,35829	Ö-4x14W	1750	4	1,39419
C3-Z17	discussion	3,65	2,5	200	0,423925668	0,22	9759,35829	Ö-4x14W	1750	4	1,39419
C3-Z19	discussion	3,65	2,5	200	0,423925668	0,22	9759,35829	Ö-4x14W	1750	4	1,39419
C3-Z28	discussion	3,65	2,5	200	0,423925668	0,22	9759,35829	Ö-4x14W	1750	4	1,39419
C3-Z30	criminal court member room	3,4	6,15	200	0,625579656	0,24	20500	Ö-4x14W	1750	4	2,92857
C3-Z31	criminal court president	7,5	5,9	250	0,943496802	0,32	40670,9559	Ö-4x14W	1750	4	5,81014
C3-Z32	criminal court clerical	7,5	5,9	250	0,943496802	0,32	40670,9559	Ö-4x14W	1750	4	5,81014
C3 BLOCK	ROOM NAME	A	B	E	k	η	ΦT	L Types	ΦL	Z	N
C3-Z33	criminal court member room	3,4	6,15	200	0,625579656	0,24	20500	Ö-4x14W	1750	4	2,92857
C3-Z41	criminal court president	7,5	5,9	250	0,943496802	0,32	40670,9559	Ö-4x14W	1750	4	5,81014
C3-Z42	criminal court clerical	7,5	5,9	250	0,943496802	0,32	40670,9559	Ö-4x14W	1750	4	5,81014
C3-Z43	criminal court member room	3,4	6,15	200	0,625579656	0,24	20500	Ö-4x14W	1750	4	2,92857
C3-Z44	criminal court member room	3,4	6,15	200	0,625579656	0,24	20500	Ö-4x14W	1750	4	2,92857
C3-Z45	criminal court member room	3,4	6,15	200	0,625579656	0,24	20500	Ö-4x14W	1750	4	2,92857
C3-Z46	criminal court member room	3,4	6,15	200	0,625579656	0,24	20500	Ö-4x14W	1750	4	2,92857
C3-Z47	criminal court president	7,5	5,9	250	0,943496802	0,32	40670,9559	Ö-4x14W	1750	4	5,81014
C3-Z48	criminal court clerical	7,5	5,9	250	0,943496802	0,32	40670,9559	Ö-4x14W	1750	4	5,81014
C3-Z49	criminal court clerical	7,5	5,9	250	0,943496802	0,32	40670,9559	Ö-4x14W	1750	4	5,81014
C3-Z50	criminal court president	7,5	5,9	250	0,943496802	0,32	40670,9559	Ö-4x14W	1750	4	5,81014

C3 BLOCK	ROOM NAME	A	B	E	k	η	ΦT	L Types	ΦL	Z	N
C3-Z51	criminal court member room	3,4	6,15	200	0,625579656	0,24	20500	Ö-4x14W	1750	4	2,92857
C3-Z52	criminal court member room	3,4	6,15	200	0,625579656	0,24	20500	Ö-4x14W	1750	4	2,92857
D1 BLOCK	**ROOM NAME**	**A**	**B**	**E**	**k**	η	ΦT	**L Types**	ΦL	**Z**	**N**
D1-Z05	Lawyer resting	12	5,5	200	1,07755102	0,36	43137,2549	Ö-4x14W	1750	4	6,16246
D2 BLOCK	**ROOM NAME**	**A**	**B**	**E**	**k**	η	ΦT	**L Types**	ΦL	**Z**	**N**
D2-Z02	Lawyer interview	6,2	3,5	200	0,639175258	0,24	21274,5098	Ö-4X14W	1750	4	3,03922
D2-Z03	court punisment instance sage room	6,2	3,5	200	0,639175258	0,24	21274,5098	Ö-4X14W	1750	4	3,03922
D2-Z04	court punisment instance clerical	6,5	6,15	200	0,902879729	0,32	29393,3824	Ö-4x14W	1750	4	4,19905
D2-Z04	Director	3,8	2,7	200	0,450989011	0,22	10973,262	Ö-4x14W	1750	4	1,56761
D2-Z05	court punisment instance clerical	6,5	6,15	200	0,902879729	0,32	29393,3824	Ö-4x14W	1750	4	4,19905
D2-Z05	Director	3,8	2,7	200	0,450989011	0,22	10973,262	Ö-4x14W	1750	4	1,56761
D2-Z06	court punisment instance sage room	6,2	3,5	200	0,639175258	0,24	21274,5098	Ö-4X14W	1750	4	3,03922
D2-Z07	Lawyer interview	6,2	3,5	200	0,639175258	0,24	21274,5098	Ö-4X14W	1750	4	3,03922
D2-Z08	court punisment instance sage room	6,2	3,5	200	0,639175258	0,24	21274,5098	Ö-4X14W	1750	4	3,03922
D2-Z09	court punisment instance clerical	6,5	6,15	200	0,902879729	0,32	29393,3824	Ö-4x14W	1750	4	4,19905
D2-Z09	Director	3,8	2,7	200	0,450989011	0,22	10973,262	Ö-4x14W	1750	4	1,56761
D2-Z10	court punisment instance clerical	6,5	6,15	200	0,902879729	0,32	29393,3824	Ö-4x14W	1750	4	4,19905
D2-Z10	Director	3,8	2,7	200	0,450989011	0,22	10973,262	Ö-4x14W	1750	4	1,56761
D2-Z11	court punisment instance sage room	6,2	3,5	200	0,639175258	0,24	21274,5098	Ö-4X14W	1750	4	3,03922
D2-Z12	Lawyer interview	6,2	3,5	200	0,639175258	0,24	21274,5098	Ö-4X14W	1750	4	3,03922
D2-Z15	court punisment instance hearing room	7,5	5,9	250	0,943496802	0,32	40670,9559	Ö-4x14W	1750	4	5,81014
D2-Z18	court punisment instance hearing room	7,5	5,9	250	0,943496802	0,32	40670,9559	Ö-4x14W	1750	4	5,81014
D2-Z20	court punisment instance hearing room	7,5	5,9	250	0,943496802	0,32	40670,9559	Ö-4x14W	1750	4	5,81014
D2-Z23	court punisment instance hearing room	7,5	5,9	250	0,943496802	0,32	40670,9559	Ö-4x14W	1750	4	5,81014
D2-Z28	court punisment instance hearing room	7,5	5,9	250	0,943496802	0,32	40670,9559	Ö-4x14W	1750	4	5,81014
D2-Z31	court punisment instance hearing room	7,5	5,9	250	0,943496802	0,32	40670,9559	Ö-4x14W	1750	4	5,81014
D2-Z33	court punisment instance hearing room	7,5	5,9	250	0,943496802	0,32	40670,9559	Ö-4x14W	1750	4	5,81014
D2-Z36	court punisment instance hearing room	7,5	5,9	250	0,943496802	0,32	40670,9559	Ö-4x14W	1750	4	5,81014
D2-Z38	court punisment instance hearing room	7,5	5,9	250	0,943496802	0,32	40670,9559	Ö-4x14W	1750	4	5,81014
D2-Z41	court punisment instance hearing room	7,5	5,9	250	0,943496802	0,32	40670,9559	Ö-4x14W	1750	4	5,81014
D2-Z45	Lawyer interview	6,2	3,5	200	0,639175258	0,24	21274,5098	Ö-4X14W	1750	4	3,03922

D2 BLOCK	ROOM NAME	A	B	E	k	η	ΦT	L Types	ΦL	Z	N
D2-Z46	court punisment instance sage room	6,2	3,5	200	0,639175258	0,24	21274,5098	Ö-4X14W	1750	4	3,03922
D2-Z47	court punisment instance clerical	7,5	5,9	250	0,943496802	0,32	40670,9559	Ö-4x14W	1750	4	5,81014
D2-Z48	court punisment instance clerical	7,5	5,9	250	0,943496802	0,32	40670,9559	Ö-4x14W	1750	4	5,81014
D2-Z49	court punisment instance sage room	6,2	3,5	200	0,639175258	0,24	21274,5098	Ö-4X14W	1750	4	3,03922
D2-Z50	Lawyer interview	6,2	3,5	200	0,639175258	0,24	21274,5098	Ö-4X14W	1750	4	3,03922
D2-Z51	court punisment instance sage room	6,2	3,5	200	0,639175258	0,24	21274,5098	Ö-4X14W	1750	4	3,03922
D2-Z52	court punisment instance clerical	7,5	5,9	250	0,943496802	0,32	40670,9559	Ö-4x14W	1750	4	5,81014
D2-Z53	court punisment instance clerical	7,5	5,9	250	0,943496802	0,32	40670,9559	Ö-4x14W	1750	4	5,81014
D2-Z54	court punisment instance sage room	6,2	3,5	200	0,639175258	0,24	21274,5098	Ö-4X14W	1750	4	3,03922
D2-Z55	Lawyer interview	6,2	3,5	200	0,639175258	0,24	21274,5098	Ö-4X14W	1750	4	3,03922
D2-Z56	court punisment instance sage room	6,2	3,5	200	0,639175258	0,24	21274,5098	Ö-4X14W	1750	4	3,03922
D2-Z57	court punisment instance clerical	7,5	5,9	250	0,943496802	0,32	40670,9559	Ö-4x14W	1750	4	5,81014
D2-Z58	court punisment instance clerical	7,5	5,9	250	0,943496802	0,32	40670,9559	Ö-4x14W	1750	4	5,81014
D2-Z59	court punisment instance sage room	6,2	3,5	200	0,639175258	0,24	21274,5098	Ö-4X14W	1750	4	3,03922
D2-Z60	Lawyer interview	6,2	3,5	200	0,639175258	0,24	21274,5098	Ö-4X14W	1750	4	3,03922
D3 BLOCK	ROOM NAME	A	B	E	k	η	ΦT	L Types	ΦL	Z	N
D3-Z07	consumer protection sage room	6,2	3,5	200	0,639175258	0,24	21274,5098	Ö-4X14W	1750	4	3,03922
D3-Z08	consumer protection clerical	7,5	5,9	250	0,943496802	0,32	40670,9559	Ö-4x14W	1750	4	5,81014
D3-Z09	consumer protection clerical	7,5	5,9	250	0,943496802	0,32	40670,9559	Ö-4x14W	1750	4	5,81014
D3-Z10	consumer protection sage room	6,2	3,5	200	0,639175258	0,24	21274,5098	Ö-4X14W	1750	4	3,03922
D3-Z11	family Law sage room	6,2	3,5	200	0,639175258	0,24	21274,5098	Ö-4X14W	1750	4	3,03922
D3-Z12	Law execution sage clerical room	7,5	5,9	250	0,943496802	0,32	40670,9559	Ö-4x14W	1750	4	5,81014
D3-Z13	Law execution sage clerical room	7,5	5,9	250	0,943496802	0,32	40670,9559	Ö-4x14W	1750	4	5,81014
D3-Z14	consumer protection sage room	6,2	3,5	200	0,639175258	0,24	21274,5098	Ö-4X14W	1750	4	3,03922
D3-Z15	consumer protection sage room	6,2	3,5	200	0,639175258	0,24	21274,5098	Ö-4X14W	1750	4	3,03922
D3-Z16	Law execution sage clerical room	7,5	5,9	250	0,943496802	0,32	40670,9559	Ö-4x14W	1750	4	5,81014
D3-Z17	Law execution sage clerical room	7,5	5,9	250	0,943496802	0,32	40670,9559	Ö-4x14W	1750	4	5,81014
D3-Z18	consumer protection sage room	6,2	3,5	200	0,639175258	0,24	21274,5098	Ö-4X14W	1750	4	3,03922
D3-Z23	family Law hearing room	7,5	5,9	250	0,943496802	0,32	40670,9559	Ö-4x14W	1750	4	5,81014
D3-Z26	family Law hearing room	7,5	5,9	250	0,943496802	0,32	40670,9559	Ö-4x14W	1750	4	5,81014
D3-Z27	family Law hearing room	7,5	5,9	250	0,943496802	0,32	40670,9559	Ö-4x14W	1750	4	5,81014
D3-Z30	family Law hearing room	7,5	5,9	250	0,943496802	0,32	40670,9559	Ö-4x14W	1750	4	5,81014

D3 BLOCK	ROOM NAME	A	B	E	k	η	ΦT	L Types	ΦL	Z	N
D3-Z31	consumer protection hearing room	7,5	5,9	250	0,943496802	0,32	40670,9559	Ö-4x14W	1750	4	5,81014
D3-Z34	consumer protection hearing room	7,5	5,9	250	0,943496802	0,32	40670,9559	Ö-4x14W	1750	4	5,81014
D3-Z37	Pedegog	4,2	3,5	200	0,545454545	0,23	15038,3632	Ö-4X14W	1750	4	2,14834
D3-Z38	psycholog	4,2	3,5	200	0,545454545	0,23	15038,3632	Ö-4X14W	1750	4	2,14834
D3-Z39	psycholog	4,2	3,5	200	0,545454545	0,23	15038,3632	Ö-4X14W	1750	4	2,14834
D3-Z40	Pedegog	4,2	3,5	200	0,545454545	0,23	15038,3632	Ö-4X14W	1750	4	2,14834
D3-Z41	social services	4,2	3,5	200	0,545454545	0,23	15038,3632	Ö-4X14W	1750	4	2,14834
D3-Z42	social services	4,2	3,5	200	0,545454545	0,23	15038,3632	Ö-4X14W	1750	4	2,14834
D3-Z43	Pedegog	4,2	3,5	200	0,545454545	0,23	15038,3632	Ö-4X14W	1750	4	2,14834
D3-Z44	psycholog	4,2	3,5	200	0,545454545	0,23	15038,3632	Ö-4X14W	1750	4	2,14834
D3-Z45	psycholog	4,2	3,5	200	0,545454545	0,23	15038,3632	Ö-4X14W	1750	4	2,14834
D3-Z46	Pedegog	4,2	3,5	200	0,545454545	0,23	15038,3632	Ö-4X14W	1750	4	2,14834
D3-Z47	social services	4,2	3,5	200	0,545454545	0,23	15038,3632	Ö-4X14W	1750	4	2,14834
BLOCK	ROOM NAME	A	B	E	k	η	ΦT	L Types	ΦL	Z	N
A1 - 304	Rep.Attorney Gen. Room	3,5	6	200	0,631578947	0,25	19764,7059	Ö-4x14W	1750	4	2,82353
A1 - 305	Rep.Attorney Gen. Room	3,5	6	200	0,631578947	0,25	19764,7059	Ö-4x14W	1750	4	2,82353
A1 - 306	Rep.Attorney Gen. Room	3,5	6	200	0,631578947	0,25	19764,7059	Ö-4x14W	1750	4	2,82353
A1 - 307	Rep.Attorney Gen. Room	3,5	6	200	0,631578947	0,25	19764,7059	Ö-4x14W	1750	4	2,82353
A1 - 308	Rep.Attorney Gen. Room	3,5	6	200	0,631578947	0,25	19764,7059	Ö-4x14W	1750	4	2,82353
A1 - 311	Rep.Attorney Gen. Room	3,5	6	200	0,631578947	0,25	19764,7059	Ö-4x14W	1750	4	2,82353
A1 - 312	Rep.Attorney Gen. Room	3,5	6	200	0,631578947	0,25	19764,7059	Ö-4x14W	1750	4	2,82353
A1 - 313	Rep.H.Attorney Gen. Agent	6	7	250	0,923076923	0,325	38009,0498	Ö-4x14W	1750	4	5,42986
A1 - 314	Secretary	3,5	6	200	0,631578947	0,25	19764,7059	Ö-4x14W	1750	4	2,82353
A1 - 315	Rep.H.Attorney Gen. Agent	6	7	250	0,923076923	0,325	38009,0498	Ö-4x14W	1750	4	5,42986
A1 - 316	Auxiliary Room	3	6,9	200	0,597402597	0,24	20294,1176	Ö-4x14W	1750	4	2,89916
A1 - 324	Rep.H.Attorn.Gen. Agent Asoc.	8	8,5	250	1,177489177	0,39	51282,0513	Ö-4x14W	1750	4	7,32601
A1 - 324	Manager Room	3	3,5	200	0,623425	0,26	9502,26244	Ö-4x14W	1750	4	1,35747
A1 - 327	Rep.H.Attorney Gen. Agent	6	7	250	0,923076923	0,325	38009,0498	Ö-4x14W	1750	4	5,42986
A1 - 328	Secretary	3,5	6	200	0,631578947	0,25	19764,7059	Ö-4x14W	1750	4	2,82353
A1 - 329	Rep.H.Attorney Gen. Agent	6	7	250	0,923076923	0,325	38009,0498	Ö-4x14W	1750	4	5,42986
A1 - 330	Secretary	3,5	6	200	0,631578947	0,25	19764,7059	Ö-4x14W	1750	4	2,82353
A1 - 331	Rep.H.Attorney Gen. Agent	6	7	250	0,923076923	0,325	38009,0498	Ö-4x14W	1750	4	5,42986

A1 - 336	General Treasure Agent	8	8,5	250	1,177489177	0,39	51282,0513	Ö-4x14W	1750	4	7,32601
A1 - 336	Manager Room	3	3,5	200	0,58234	0,24	10294,1176	Ö-4x14W	1750	4	1,47059
A1 - 337	Rep.H.Attorney Gen. Agent	6	7	250	0,923076923	0,325	38009,0498	Ö-4x14W	1750	4	5,42986
A1 - 338	Secretary	3,5	6	200	0,631578947	0,25	19764,7059	Ö-4x14W	1750	4	2,82353
A1 - 339	Rep.H.Attorney Gen. Agent	6	7	250	0,923076923	0,325	38009,0498	Ö-4x14W	1750	4	5,42986
A1 - 340	Rep.Attorney Gen.	3,5	6	200	0,631578947	0,25	19764,7059	Ö-4x14W	1750	4	2,82353
A1 - 341	Rep.Attorney Gen.	3,5	6	200	0,631578947	0,25	19764,7059	Ö-4x14W	1750	4	2,82353
A1 - 344	Rep.Attorney Gen.	3,5	6	200	0,631578947	0,25	19764,7059	Ö-4x14W	1750	4	2,82353
A1 - 345	Rep.Attorney Gen.	3,5	6	200	0,631578947	0,25	19764,7059	Ö-4x14W	1750	4	2,82353
A1 - 346	Rep.Attorney Gen.	3,5	6	200	0,631578947	0,25	19764,7059	Ö-4x14W	1750	4	2,82353
A1 - 347	Rep.Attorney Gen.	3,5	6	200	0,631578947	0,25	19764,7059	Ö-4x14W	1750	4	2,82353
BLOCK	**ROOM NAME**	**A**	**B**	**E**	**k**	**η**	**ΦT**	**L Types**	**ΦL**	**Z**	**N**
A1 - 348	Rep.Attorney Gen.	3,5	6	200	0,631578947	0,25	19764,7059	Ö-4x14W	1750	4	2,82353
A1 - 352	Rep.H.Attorn.Gen. Agent Asoc.	8	8,5	250	1,177489177	0,39	51282,0513	Ö-4x14W	1750	4	7,32601
A1 - 352	Manager Room	3	3,5	200	0,62355	0,26	9502,26244	Ö-4x14W	1750	4	1,35747
BLOCK	**ROOM NAME**	**A**	**B**	**E**	**k**	**η**	**ΦT**	**L Types**	**ΦL**	**Z**	**N**
B1 - 302	Electricity Room	3,5	8,2	100	0,700854701	0,275	12278,0749	P1-2x36W	2350	2	2,61236
B1 - 305	Lawyer Resting Lounge	5,5	11,4	200	1,060016906	0,36	40980,3922	Ö-4x14W	1750	4	5,85434
B2 - 302	Pea.Law Court Judge Room	3,5	6	200	0,631578947	0,25	19764,7059	Ö-4x14W	1750	4	2,82353
B2 - 303	Pea.Law Court Agent	5,5	6	250	0,819875776	0,32	30330,8824	Ö-4x14W	1750	4	4,33298
B2 - 303	Manager Room	2,7	3,5	250	0,435483871	0,2	13897,0588	Ö-4x14W	1750	4	1,98529
B2 - 304	Pea.Law Court Agent	5,5	6	250	0,819875776	0,32	30330,8824	Ö-4x14W	1750	4	4,33298
B2 - 304	Manager Room	2,7	3,5	250	0,435483871	0,2	13897,0588	Ö-4x14W	1750	4	1,98529
B2 - 305	Pea.Law Court Judge Room	3,5	6	200	0,631578947	0,25	19764,7059	Ö-4x14W	1750	4	2,82353
B2 - 306	Pea.Law Court Judge Room	3,5	6	200	0,631578947	0,25	19764,7059	Ö-4x14W	1750	4	2,82353
B2 - 307	Pea.Law Court Agent	5,5	6	200	0,819875776	0,32	24264,7059	Ö-4x14W	1750	4	3,46639
B2 - 307	Manager Room	2,7	3,5	250	0,435483871	0,2	13897,0588	Ö-4x14W	1750	4	1,98529
B2 - 308	Pea.Law Court Agent	5,5	6	200	0,819875776	0,32	24264,7059	Ö-4x14W	1750	4	3,46639
B2 - 308	Manager Room	2,7	3,5	250	0,435483871	0,2	13897,0588	Ö-4x14W	1750	4	1,98529
B2 - 309	Pea.Law Court Judge Room	3,5	6	200	0,631578947	0,25	19764,7059	Ö-4x14W	1750	4	2,82353
B2 - 310	Lawyer Resting Lounge	6	7	250	0,923076923	0,32	38602,9412	Ö-4x14W	1750	4	6,23533
B2 - 311	5.Pea.Law Trial Hall	5,4	7,6	250	0,901978022	0,31	38937,3814	Ö-4x14W	1750	4	5,56248

BLOCK	ROOM NAME	A	B	E	k	η	ΦT	L Types	ΦL	Z	N
B2 - 314	6.Pea.Law Trial Hall	5,4	7,6	250	0,901978022	0,31	38937,3814	Ö-4x14W	1750	4	5,56248
B2 - 315	7. Pea.Law Trial Hall	5,4	7,6	250	0,901978022	0,31	38937,3814	Ö-4x14W	1750	4	5,56248
B2 - 318	8. Pea.Law Trial Hall	5,4	7,6	250	0,901978022	0,31	38937,3814	Ö-4x14W	1750	4	5,56248
B2 - 321	13. Business Law Trial Hall	5,4	7,6	250	0,901978022	0,31	38937,3814	Ö-4x14W	1750	4	5,56248
B2 - 324	12. Business Law Trial Hall	5,4	7,6	250	0,901978022	0,31	38937,3814	Ö-4x14W	1750	4	5,56248
B2 - 325	1.Pea.Law Trial Hall	5,4	7,6	250	0,901978022	0,31	38937,3814	Ö-4x14W	1750	4	5,56248
B2 - 328	2. Pea.Law Trial Hall	5,4	7,6	250	0,901978022	0,31	38937,3814	Ö-4x14W	1750	4	5,56248
B2 - 329	3. Pea.Law Trial Hall	5,4	7,6	250	0,901978022	0,31	38937,3814	Ö-4x14W	1750	4	5,56248
B2 - 332	4. Pea.Law Trial Hall	5,4	7,6	250	0,901978022	0,31	38937,3814	Ö-4x14W	1750	4	5,56248
BLOCK	ROOM NAME	A	B	E	k	η	ΦT	L Types	ΦL	Z	N
B2 - 335	Pea.Law Court Judge Room	3,5	6	200	0,631578947	0,25	19764,7059	Ö-4x14W	1750	4	2,82353
B2 - 336	Pea.Law Court Agent	5,5	6	200	0,819875776	0,32	24264,7059	Ö-4x14W	1750	4	3,46639
B2 - 336	Manager Room	2,7	3,5	250	0,435483871	0,2	13897,0588	Ö-4x14W	1750	4	1,98529
B2 - 337	Pea.Law Court Agent	5,5	6	200	0,819875776	0,32	24264,7059	Ö-4x14W	1750	4	3,46639
B2 - 337	Manager Room	2,7	3,5	250	0,435483871	0,2	13897,0588	Ö-4x14W	1750	4	1,98529
B2 - 338	Pea.Law Court Judge Room	3,5	6	200	0,631578947	0,25	19764,7059	Ö-4x14W	1750	4	2,82353
B2 - 339	Pea.Law Court Judge Room	3,5	6	200	0,631578947	0,25	19764,7059	Ö-4x14W	1750	4	2,82353
B2 - 340	Pea.Law Court Agent	5,5	6	200	0,819875776	0,32	24264,7059	Ö-4x14W	1750	4	3,46639
B2 - 340	Manager Room	2,7	3,5	250	0,435483871	0,2	13897,0588	Ö-4x14W	1750	4	1,98529
B2 - 341	Pea.Law Court Agent	5,5	6	200	0,819875776	0,32	24264,7059	Ö-4x14W	1750	4	3,46639
B2 - 341	Manager Room	2,7	3,5	250	0,435483871	0,2	13897,0588	Ö-4x14W	1750	4	1,98529
B2 - 342	Pea.Law Court Judge Room	3,5	6	200	0,631578947	0,25	19764,7059	Ö-4x14W	1750	4	2,82353
B2 - 343	Business Law Judge Room	3,5	6	200	0,631578947	0,25	19764,7059	Ö-4x14W	1750	4	2,82353
B2 - 344	Business Law Agent	5,5	6	200	0,819875776	0,3	25882,3529	Ö-4x14W	1750	4	3,69748
B2 - 344	Manager Room	2,7	3,5	250	0,435483871	0,2	13897,0588	Ö-4x14W	1750	4	1,98529
B2 - 345	Business Law Agent	5,5	6	200	0,819875776	0,3	25882,3529	Ö-4x14W	1750	4	3,69748
B2 - 345	Manager Room	2,7	3,5	250	0,435483871	0,2	13897,0588	Ö-4x14W	1750	4	1,98529
B2 - 346	Business Law Judge Room	3,5	6	200	0,631578947	0,25	19764,7059	Ö-4x14W	1750	4	2,82353
B3 - 302	Electricity Room	2,5	4,2	100	0,447761194	0,2	6176,47059	P1-2x36W	2350	2	1,31414
B3 - 303	Electricity Room	2,5	4,2	100	0,447761194	0,2	6176,47059	P1-2x36W	2350	2	1,31414
B3 - 307	Business Law Judge Room	3,5	6	200	0,631578947	0,25	19764,7059	Ö-4x14W	1750	4	2,82353
B3 - 308	Business Law Agent	5,5	6	200	0,819875776	0,3	25882,3529	Ö-4x14W	1750	4	3,69748

BLOCK	ROOM NAME	A	B	E	k	η	ΦT	L Types	ΦL	Z	N
B3 - 308	Manager Room	2,7	3,5	250	0,435483871	0,2	13897,0588	Ö-4x14W	1750	4	1,98529
B3 - 309	Business Law Agent	5,5	6	200	0,819875776	0,3	25882,3529	Ö-4x14W	1750	4	3,69748
B3 - 309	Manager Room	2,7	3,5	250	0,435483871	0,2	13897,0588	Ö-4x14W	1750	4	1,98529
B3 - 310	Business Law Judge Room	3,5	6	200	0,631578947	0,25	19764,7059	Ö-4x14W	1750	4	2,82353
B3 - 311	Business Law Judge Room	3,5	6	200	0,631578947	0,25	19764,7059	Ö-4x14W	1750	4	2,82353
B3 - 312	Business Law Agent	5,5	6	200	0,819875776	0,3	25882,3529	Ö-4x14W	1750	4	3,69748
B3 - 312	Manager Room	2,7	3,5	250	0,435483871	0,2	13897,0588	Ö-4x14W	1750	4	1,98529
BLOCK	ROOM NAME	A	B	E	k	η	ΦT	L Types	ΦL	Z	N
B3 - 313	Business Law Agent	5,5	6	200	0,819875776	0,3	25882,3529	Ö-4x14W	1750	4	3,69748
B3 - 313	Manager Room	2,7	3,5	250	0,435483871	0,2	13897,0588	Ö-4x14W	1750	4	1,98529
B3 - 314	Business Law Judge Room	3,5	6	200	0,631578947	0,25	19764,7059	Ö-4x14W	1750	4	2,82353
B3 - 315	Business Law Judge Room	3,5	6	200	0,631578947	0,25	19764,7059	Ö-4x14W	1750	4	2,82353
B3 - 316	Business Law Agent	5,5	6	200	0,819875776	0,3	25882,3529	Ö-4x14W	1750	4	3,69748
B3 - 316	Manager Room	2,7	3,5	250	0,435483871	0,2	13897,0588	Ö-4x14W	1750	4	1,98529
B3 - 317	Business Law Agent	5,5	6	250	0,819875776	0,3	32352,9412	Ö-4x14W	1750	4	4,62185
B3 - 317	Manager Room	2,7	3,5	250	0,435483871	0,2	13897,0588	Ö-4x14W	1750	4	1,98529
B3 - 318	Business Law Judge Room	3,5	6	200	0,631578947	0,25	19764,7059	Ö-4x14W	1750	4	2,82353
B3 - 323	18.Business Law Trial Hall	5,4	7,6	250	0,901978022	0,31	38937,3814	Ö-4x14W	1750	4	5,56248
B3 - 326	17.Business Law Trial Hall	5,4	7,6	250	0,901978022	0,31	38937,3814	Ö-4x14W	1750	4	5,56248
B3 - 327	16.Business Law Trial Hall	5,4	7,6	250	0,901978022	0,31	38937,3814	Ö-4x14W	1750	4	5,56248
B3 - 330	15. Business Law Trial Hall	5,4	7,6	250	0,901978022	0,31	38937,3814	Ö-4x14W	1750	4	5,56248
B3 - 331	14.Business Law Trial Hall	5,4	7,6	250	0,901978022	0,31	38937,3814	Ö-4x14W	1750	4	5,56248
B3 - 334	13.Business Law Trial Hall	5,4	7,6	250	0,901978022	0,31	38937,3814	Ö-4x14W	1750	4	5,56248
BLOCK	ROOM NAME	A	B	E	k	η	ΦT	L Types	ΦL	Z	N
C1-302	25.Criminal Court Trial Hall	8	13	300	1,414965986	0,43	85362,5171	Ö-4x14W	1750	4	12,1946
C1-303	1.Child Court Trial Hall	8	13	300	1,414965986	0,43	85362,5171	Ö-4x14W	1750	4	12,1946
C1-304	2.Child Court Trial Hall	8	13	300	1,414965986	0,43	85362,5171	Ö-4x14W	1750	4	12,1946
C1-305	Seminar Hall	8	13	300	1,414965986	0,43	85362,5171	Ö-4x14W	1750	4	12,1946
C1-308	Preparation Room	3,6	4,3	100	0,559855335	0,22	8278,07487	Ö-4x14W	1750	4	1,18258
C1-315	Lawyer Interview	2,6	2,8	150	0,385185185	0,2	6423,52941	Ö-4x14W	1750	4	0,91765
C1-316	Consultation	2,6	4	150	0,45021645	0,21	8739,4958	Ö-4x14W	1750	4	1,2485
C1-318	Consultation	2,6	4	150	0,45021645	0,21	8739,4958	Ö-4x14W	1750	4	1,2485

BLOCK	ROOM NAME	A	B	E	k	η	ΦT	L Types	ΦL	Z	N
C1-320	Lawyer İnterview	2,6	2,8	150	0,385185185	0,2	6423,52941	Ö-4x14W	1750	4	0,91765
C1-327	Consultation	2,6	4	150	0,45021645	0,21	8739,4958	Ö-4x14W	1750	4	1,2485
C1-329	Criminal Court Memb.Room	3,5	6	200	0,631578947	0,25	19764,7059	Ö-4x14W	1750	4	2,82353
C1-330	Criminal Court President	6	7	300	0,923076923	0,35	42352,9412	Ö-4x14W	1750	4	6,05042
C1-331	Criminal Court Agent	5,5	6	250	0,819875776	0,32	30330,8824	Ö-4x14W	1750	4	4,33298
BLOCK	**ROOM NAME**	**A**	**B**	**E**	**k**	**η**	**ΦT**	**L Types**	**ΦL**	**Z**	**N**
C1-331	Manager Room	2,7	3,7	250	0,445982143	0,2	14691,1765	Ö-4x14W	1750	4	2,09874
C1-332	Criminal Court Memb.Room	3,5	6	200	0,631578947	0,25	19764,7059	Ö-4x14W	1750	4	2,82353
C1-340	Child Court President	6,2	7	300	0,939393939	0,35	43764,7059	Ö-4x14W	1750	4	6,2521
C1-341	Child Court Agent	4	10	250	0,816326531	0,32	36764,7059	Ö-4x14W	1750	4	5,62975
C1-341	Manager Room	2,7	3,7	250	0,445982143	0,2	14691,1765	Ö-4x14W	1750	4	2,09874
C1-342	Child Court Memb.Room	3,5	6	200	0,631578947	0,25	19764,7059	Ö-4x14W	1750	4	2,82353
C1-343	Child Court Memb.Room	3,5	6	200	0,631578947	0,25	19764,7059	Ö-4x14W	1750	4	2,82353
C1-344	Child Court Memb.Room	3,5	6	200	0,631578947	0,25	19764,7059	Ö-4x14W	1750	4	2,82353
C1-345	Child Court Memb.Room	3,5	6	200	0,631578947	0,25	19764,7059	Ö-4x14W	1750	4	2,82353
C1-346	Child Court President	6,2	7	250	0,939393939	0,33	38680,9269	Ö-4x14W	1750	4	5,52585
C1-347	Child Court Agent	5,5	6	250	0,819875776	0,32	30330,8824	Ö-4x14W	1750	4	4,33298
C1-347	Manager Room	2,7	3,7	250	0,445982143	0,2	14691,1765	Ö-4x14W	1750	4	2,09874
C1-348	psychologist	3,5	6	200	0,631578947	0,25	19764,7059	Ö-4x14W	1750	4	2,82353
C1-349	pedagogue	3,5	6	200	0,631578947	0,25	19764,7059	Ö-4x14W	1750	4	2,82353
C1-350	Social Services	3,5	6	200	0,631578947	0,25	19764,7059	Ö-4x14W	1750	4	2,82353
C1-351	psychologist	3,5	6	200	0,631578947	0,25	19764,7059	Ö-4x14W	1750	4	2,82353
C1-352	pedagogue	3,5	6	200	0,631578947	0,25	19764,7059	Ö-4x14W	1750	4	2,82353
C1-353	Social Services	3,5	6	200	0,631578947	0,25	19764,7059	Ö-4x14W	1750	4	2,82353
BLOCK	**ROOM NAME**	**A**	**B**	**E**	**k**	**η**	**ΦT**	**L Types**	**ΦL**	**Z**	**N**
C2 - 301	Library	6	35	250	1,463414634	0,44	140374,332	Ö-4x14W	1750	4	20,0535
BLOCK	**ROOM NAME**	**A**	**B**	**E**	**k**	**η**	**ΦT**	**L Types**	**ΦL**	**Z**	**N**
C3 - 302	26.Criminal Court Trial Hall	8	13	300	1,414965986	0,43	85362,5171	Ö-4x14W	1750	4	12,1946
C3 - 303	4.Child Court Trial Hall	8	13	300	1,414965986	0,43	85362,5171	Ö-4x14W	1750	4	12,1946
C3 - 304	3.Child Court Trial Hall	8	13	300	1,414965986	0,43	85362,5171	Ö-4x14W	1750	4	12,1946
C3 - 305	Seminar Hall	8	13	300	1,414965986	0,43	85362,5171	Ö-4x14W	1750	4	12,1946
C3 - 308	Preparation Room	3,6	4,3	100	0,559855335	0,23	7918,15857	Ö-4x14W	1750	4	1,13117

BLOCK	ROOM NAME	A	B	E	k	η	ΦT	L Types	ΦL	Z	N
C3 - 315	Lawyer İnterview	2,6	2,8	150	0,385185185	0,2	6423,52941	Ö-4x14W	1750	4	0,91765
C3 - 316	Consultation	2,6	4	150	0,45021645	0,22	8342,24599	Ö-4x14W	1750	4	1,19175
C3 - 318	Consultation	2,6	4	150	0,45021645	0,22	8342,24599	Ö-4x14W	1750	4	1,19175
BLOCK	ROOM NAME	A	B	E	k	η	ΦT	L Types	ΦL	Z	N
C3 - 320	Lawyer İnterview	2,6	2,8	150	0,385185185	0,2	6423,52941	Ö-4x14W	1750	4	0,91765
C3 - 326	Lawyer İnterview	2,6	2,8	150	0,385185185	0,2	6423,52941	Ö-4x14W	1750	4	0,91765
C3 - 327	Consultation	2,6	4	150	0,45021645	0,22	8342,24599	Ö-4x14W	1750	4	1,19175
C3 - 329	Criminal Court Memb.Room	3,5	6	200	0,631578947	0,25	19764,7059	Ö-4x14W	1750	4	2,82353
C3 - 331	Criminal Court Agent	5,5	6	250	0,819875776	0,32	30330,8824	Ö-4x14W	1750	4	4,33298
C3 - 331	Manager Room	2,7	3,7	250	0,445982143	0,2	14691,1765	Ö-4x14W	1750	4	2,09874
C3 - 332	Criminal Court Memb.Room	3,5	6	200	0,631578947	0,25	19764,7059	Ö-4x14W	1750	4	2,82353
C3 - 340	Child Court President	6,2	7	250	0,939393939	0,32	39889,7059	Ö-4x14W	1750	4	5,69853
C3 - 341	Child Court Agent	4	10	250	0,816326531	0,32	36764,7059	Ö-4x14W	1750	4	5,62975
C3 - 341	Manager Room	2,7	3,7	250	0,445982143	0,2	14691,1765	Ö-4x14W	1750	4	2,09874
C3 - 342	Child Court Memb.Room	3,5	6	200	0,631578947	0,25	19764,7059	Ö-4x14W	1750	4	2,82353
C3 - 343	Child Court Memb.Room	3,5	6	200	0,631578947	0,25	19764,7059	Ö-4x14W	1750	4	2,82353
C3 - 344	Child Court Memb.Room	3,5	6	200	0,631578947	0,25	19764,7059	Ö-4x14W	1750	4	2,82353
C3 - 345	Child Court Memb.Room	3,5	6	200	0,631578947	0,25	19764,7059	Ö-4x14W	1750	4	2,82353
C3 - 346	Child Court President	6	7	250	0,923076923	0,32	38602,9412	Ö-4x14W	1750	4	5,51471
C3 - 347	Child Court Agent	5,5	6	250	0,819875776	0,32	30330,8824	Ö-4x14W	1750	4	4,33298
C3 - 347	Manager Room	2,7	3,7	250	0,445982143	0,2	14691,1765	Ö-4x14W	1750	4	2,09874
C3 - 348	psychologist	3,5	6	200	0,631578947	0,25	19764,7059	Ö-4x14W	1750	4	2,82353
C3 - 349	pedagogue	3,5	6	200	0,631578947	0,25	19764,7059	Ö-4x14W	1750	4	2,82353
C3 - 350	Social Services	3,5	6	200	0,631578947	0,25	19764,7059	Ö-4x14W	1750	4	2,82353
C3 - 351	psychologist	3,5	6	200	0,631578947	0,25	19764,7059	Ö-4x14W	1750	4	2,82353
C3 - 352	pedagogue	3,5	6	200	0,631578947	0,25	19764,7059	Ö-4x14W	1750	4	2,82353
C3 - 353	Social Services	3,5	6	200	0,631578947	0,25	19764,7059	Ö-4x14W	1750	4	2,82353
BLOCK	ROOM NAME	A	B	E	k	η	ΦT	L Types	ΦL	Z	N
D1 - 302	Electricity Room	3,5	8,2	100	0,700854701	0,27	12505,4466	P1-2x36W	2350	2	2,66073
D1 - 305	Lawyer Resting Room	5,5	11,3	200	1,056972789	0,37	39523,0525	Ö-4x14W	1750	4	5,64615
BLOCK	ROOM NAME	A	B	E	k	η	ΦT	L Types	ΦL	Z	N
D2 - 302	Lawyer İnterview	3,5	6	200	0,631578947	0,25	19764,7059	Ö-4x14W	1750	4	2,82353

BLOCK	ROOM NAME	A	B	E	k	η	ΦT	L Types	ΦL	Z	N
D2 - 303	Fundam.Punish.Court Jud.Rm.	3,5	6	200	0,631578947	0,25	19764,7059	Ö-4x14W	1750	4	2,82353
BLOCK	ROOM NAME	A	B	E	k	η	ΦT	L Types	ΦL	Z	N
D2 - 304	Fundam.Punish.Court Agent	5,5	6	250	0,819875776	0,32	30330,8824	Ö-4x14W	1750	4	4,33298
D2 - 304	Manager Room	2,7	3,7	250	0,445982143	0,2	14691,1765	Ö-4x14W	1750	4	2,09874
D2 - 305	Fundam.Punish.Court Agent	5,5	6	250	0,819875776	0,32	30330,8824	Ö-4x14W	1750	4	4,33298
D2 - 305	Manager Room	2,7	3,7	250	0,445982143	0,2	14691,1765	Ö-4x14W	1750	4	2,09874
D2 - 306	Fundam.Punish.Court Jud.Rm.	3,5	6	200	0,631578947	0,25	19764,7059	Ö-4x14W	1750	4	2,82353
D2 - 307	Lawyer İnterview	3,5	6	200	0,631578947	0,25	19764,7059	Ö-4x14W	1750	4	2,82353
D2 - 308	Fundam.Punish.Court Jud.Rm.	3,5	6	200	0,631578947	0,25	19764,7059	Ö-4x14W	1750	4	2,82353
D2 - 309	Fundam.Punish.Court Agent	5,5	6	250	0,819875776	0,32	30330,8824	Ö-4x14W	1750	4	4,33298
D2 - 309	Manager Room	2,7	3,7	250	0,445982143	0,2	14691,1765	Ö-4x14W	1750	4	2,09874
D2 - 310	Fundam.Punish.Court Agent	5,5	6	200	0,819875776	0,32	24264,7059	Ö-4x14W	1750	4	3,46639
D2 - 310	Manager Room	2,7	3,7	250	0,445982143	0,2	14691,1765	Ö-4x14W	1750	4	2,09874
D2 - 311	Fundam.Punish.Court Jud.Rm.	3,5	6	200	0,631578947	0,25	19764,7059	Ö-4x14W	1750	4	2,82353
D2 - 312	Lawyer İnterview	3,5	6	200	0,631578947	0,25	19764,7059	Ö-4x14W	1750	4	2,82353
D2 - 313	Lawyer Resting Room	3,5	6	200	0,631578947	0,25	19764,7059	Ö-4x14W	1750	4	2,82353
D2 - 315	44.Fundam.Punish.Court.Trial Hall	5,4	7,6	300	0,901978022	0,35	41384,8739	Ö-4x14W	1750	4	5,91212
D2 - 318	43.Fundam.Punish.Court.Trial Hall	5,4	7,6	300	0,901978022	0,35	41384,8739	Ö-4x14W	1750	4	5,91212
D2 - 320	42.Fundam.Punish.Court.Trial Hall	5,4	7,6	300	0,901978022	0,35	41384,8739	Ö-4x14W	1750	4	5,91212
D2 - 323	41.Fundam.Punish.Court.Trial Hall	5,4	7,6	300	0,901978022	0,35	41384,8739	Ö-4x14W	1750	4	5,91212
D2 - 328	50.Fundam.Punish.Court.Trial Hall	5,4	7,6	300	0,901978022	0,35	41384,8739	Ö-4x14W	1750	4	5,91212
D2 - 331	49Fundam.Punish.Court.Trial Hall	5,4	6,5	300	0,842737095	0,35	35394,958	Ö-4x14W	1750	4	5,05642
D2 - 333	48.Fundam.Punish.Court.Trial Hall	5,4	7,6	300	0,901978022	0,35	41384,8739	Ö-4x14W	1750	4	5,91212
D2 - 336	47.Fundam.Punish.Court.Trial Hall	5,4	7,6	300	0,901978022	0,35	41384,8739	Ö-4x14W	1750	4	5,91212
D2 - 338	46.Fundam.Punish.Court.Trial Hall	5,4	7,6	300	0,901978022	0,35	41384,8739	Ö-4x14W	1750	4	5,91212
D2 - 341	45.Fundam.Punish.Court.Trial Hall	5,4	7,6	300	0,901978022	0,35	41384,8739	Ö-4x14W	1750	4	5,91212
D2 - 345	Lawyer İnterview	3,5	6	200	0,631578947	0,25	19764,7059	Ö-4x14W	1750	4	2,82353
D2 - 346	Fundam.Punish.Court Jud.Rm.	3,5	6	200	0,631578947	0,25	19764,7059	Ö-4x14W	1750	4	2,82353
D2 - 347	Fundam.Punish.Court Agent	5,5	6	250	0,819875776	0,32	30330,8824	Ö-4x14W	1750	4	4,33298
D2 - 347	Manager Room	2,7	3,7	250	0,445982143	0,2	14691,1765	Ö-4x14W	1750	4	2,09874
D2 - 348	Fundam.Punish.Court Agent	5,5	6	250	0,819875776	0,32	30330,8824	Ö-4x14W	1750	4	4,33298

BLOCK	ROOM NAME	A	B	E	k	η	ΦT	L Types	ΦL	Z	N
D2 - 348	Manager Room	2,7	3,7	250	0,445982143	0,2	14691,1765	Ö-4x14W	1750	4	2,09874
D2 - 349	Fundam.Punish.Court Jud.Rm.	3,5	6	200	0,631578947	0,25	19764,7059	Ö-4x14W	1750	4	2,82353
D2 - 350	Lawyer İnterview	3,5	6	200	0,631578947	0,25	19764,7059	Ö-4x14W	1750	4	2,82353
D2 - 351	Fundam.Punish.Court Jud.Rm.	3,5	6	200	0,631578947	0,25	19764,7059	Ö-4x14W	1750	4	2,82353
D2 - 352	Fundam.Punish.Court Agent	5,5	6	250	0,819875776	0,32	30330,8824	Ö-4x14W	1750	4	4,33298
D2 - 352	Manager Room	2,7	3,7	250	0,445982143	0,2	14691,1765	Ö-4x14W	1750	4	2,09874
D2 - 353	Fundam.Punish.Court Agent	5,5	6	250	0,819875776	0,32	30330,8824	Ö-4x14W	1750	4	4,33298
D2 - 353	Manager Room	2,7	3,7	250	0,445982143	0,2	14691,1765	Ö-4x14W	1750	4	2,09874
D2 - 354	Fundam.Punish.Court Jud.Rm.	3,5	6	200	0,631578947	0,25	19764,7059	Ö-4x14W	1750	4	2,82353
D2 - 355	Lawyer İnterview	3,5	6	200	0,631578947	0,25	19764,7059	Ö-4x14W	1750	4	2,82353
D2 - 356	Fundam.Punish.Court Jud.Rm.	3,5	6	200	0,631578947	0,25	19764,7059	Ö-4x14W	1750	4	2,82353
D2 - 357	Fundam.Punish.Court Agent	5,5	6	250	0,819875776	0,32	30330,8824	Ö-4x14W	1750	4	4,33298
D2 - 357	Manager Room	2,7	3,7	250	0,445982143	0,2	14691,1765	Ö-4x14W	1750	4	2,09874
D2 - 358	Fundam.Punish.Court Agent	5,5	6	250	0,819875776	0,32	30330,8824	Ö-4x14W	1750	4	4,33298
D2 - 358	Manager Room	2,7	3,7	250	0,445982143	0,2	14691,1765	Ö-4x14W	1750	4	2,09874
D2 - 359	Fundam.Punish.Court Jud.Rm.	3,5	6	200	0,631578947	0,25	19764,7059	Ö-4x14W	1750	4	2,82353
D2 - 360	Lawyer İnterview	3,5	6	250	0,631578947	0,25	24705,8824	Ö-4x14W	1750	4	3,52941
BLOCK	ROOM NAME	A	B	E	k	η	ΦT	L Types	ΦL	Z	N
D3 - 307	Mental&Polit. Law Crt. Jdg. Room	3,5	6	200	0,631578947	0,25	19764,7059	Ö-4x14W	1750	4	2,82353
D3 - 308	Mental&Political Law Agent	5,5	6	250	0,819875776	0,32	30330,8824	Ö-4x14W	1750	4	4,33298
D3 - 308	Manager Room	2,7	3,7	250	0,445982143	0,2	14691,1765	Ö-4x14W	1750	4	2,09874
D3 - 309	Mental&Political Law Agent	5,5	6	250	0,819875776	0,32	30330,8824	Ö-4x14W	1750	4	4,33298
D3 - 309	Manager Room	2,7	3,7	250	0,445982143	0,2	14691,1765	Ö-4x14W	1750	4	2,09874
D3 - 310	Mental&Polit. Law Crt. Jdg. Room	3,5	6	200	0,631578947	0,35	14117,6471	Ö-4x14W	1750	4	2,01681
D3 - 311	Mental&Polit. Law Crt. Jdg. Room	3,5	6	200	0,631578947	0,35	14117,6471	Ö-4x14W	1750	4	2,01681
D3 - 312	Mental&Political Law Agent	5,5	6	250	0,819875776	0,32	30330,8824	Ö-4x14W	1750	4	4,33298
D3 - 312	Manager Room	2,7	3,7	250	0,445982143	0,2	14691,1765	Ö-4x14W	1750	4	2,09874
D3 - 313	Mental&Political Law Agent	5,5	6	250	0,819875776	0,32	30330,8824	Ö-4x14W	1750	4	4,33298
D3 - 313	Manager Room	2,7	3,7	250	0,445982143	0,2	14691,1765	Ö-4x14W	1750	4	2,09874
BLOCK	ROOM NAME	A	B	E	k	η	ΦT	L Types	ΦL	Z	N
D3 - 314	Mental&Polit. Law Crt. Jdg. Room	3,5	6	200	0,631578947	0,25	19764,7059	Ö-4x14W	1750	4	2,82353

D3 - 315	Mental&Polit. Law Crt. Jdg. Room	3,5	6	200	0,631578947	0,25	19764,7059	Ö-4x14W	1750	4	2,82353
D3 - 316	Mental&Political Pun. Agent	5,5	6	250	0,819875776	0,32	30330,8824	Ö-4x14W	1750	4	4,33298
D3 - 316	Manager Room	2,7	3,7	250	0,445982143	0,2	14691,1765	Ö-4x14W	1750	4	2,09874
D3 - 317	Mental&Political Pun.Agent	5,5	6	250	0,819875776	0,32	30330,8824	Ö-4x14W	1750	4	4,33298
D3 - 317	Manager Room	2,7	3,7	250	0,445982143	0,2	14691,1765	Ö-4x14W	1750	4	2,09874
D3 - 318	Mental&Polit. Law Crt. Jdg. Room	3,5	6	200	0,631578947	0,25	19764,7059	Ö-4x14W	1750	4	2,82353
D3 - 323	8.Mental&Pol.Punish.Court Trial Hall	5,4	7,6	300	0,901978022	0,35	41384,8739	Ö-4x14W	1750	4	5,91212
D3 - 326	7. Mental&Pol.Punish.Court Trial Hall	5,4	7,6	300	0,901978022	0,35	41384,8739	Ö-4x14W	1750	4	5,91212
D3 - 327	4. Mental&Pol.Law Court Trial Hall	5,4	7,6	300	0,901978022	0,35	41384,8739	Ö-4x14W	1750	4	5,91212
D3 - 330	3. Mental&Pol.Law Court Trial Hall	5,4	7,6	300	0,901978022	0,35	41384,8739	Ö-4x14W	1750	4	5,91212
D3 - 331	2. Mental&Pol.Law Court Trial Hall	5,4	7,6	300	0,901978022	0,35	41384,8739	Ö-4x14W	1750	4	5,91212
D3 - 334	1. Mental&Pol.Law Court Trial Hall	5,4	7,6	300	0,901978022	0,35	41384,8739	Ö-4x14W	1750	4	5,91212
A1 BLOCK	**ROOM NAME**	**A**	**B**	**E**	**k**	**η**	**ØT**	**LUM TYPES**	**ØL**	**Z**	**N**
A1-704	Private Inquiry Room	3,5	6	200	0,631578947	0,25	19764,7059	Ö-4x14W	1750	4	2,82353
A1-705	Private Inquiry Room	3,5	6	200	0,631578947	0,25	19764,7059	Ö-4x14W	1750	4	2,82353
A1-706	Private Inquiry Room	3,5	6	200	0,631578947	0,25	19764,7059	Ö-4x14W	1750	4	2,82353
A1-707	Private Inquiry Room	3,5	6	200	0,631578947	0,25	19764,7059	Ö-4x14W	1750	4	2,82353
A1-708	Public Prosecutor	3,5	6	200	0,631578947	0,25	19764,7059	Ö-4x14W	1750	4	2,82353
A1-711	Officer Crimes	6,5	7	250	0,962962963	0,35	38235,2941	Ö-4x14W	1750	4	5,46218
A1-712	Correspondence Clerical Office	8	9	400	1,210084034	0,4	84705,8824	Ö-4x14W	1750	4	12,1008
A1-713	Officer Crimes Prosecutor	3,5	7	200	0,666666667	0,26	22171,9457	Ö-4x14W	1750	4	3,16742
A1-714	Officer Crimes Prosecutor	3,5	7	200	0,666666667	0,26	22171,9457	Ö-4x14W	1750	4	3,16742
A1-715	Officer Crimes Prosecutor	3,5	7	200	0,666666667	0,26	22171,9457	Ö-4x14W	1750	4	3,16742
A1-716	Officer Crimes	7	7	250	1	0,36	40032,6797	Ö-4x14W	1750	4	5,71895
A1-717	Private Inquiry Room	3,5	7	200	0,666666667	0,26	22171,9457	Ö-4x14W	1750	4	3,16742
A1-725	Base Clerical Office	7,5	11	400	1,274131274	0,4	97058,8235	Ö-4x14W	1750	4	13,8655
A1-728	Supplement Crimes Prosecutor	3,5	6,5	200	0,65	0,255	20991,9262	Ö-4x14W	1750	4	2,99885
A1-729	Supplement Crimes Prosecutor	3,5	6,5	200	0,65	0,255	20991,9262	Ö-4x14W	1750	4	2,99885
A1-730	Supplement Crimes Prosecutor	3,5	6,5	200	0,65	0,255	20991,9262	Ö-4x14W	1750	4	2,99885
A1-731	Supplement Crimes Clerical Office	7	6,5	400	0,962962963	0,35	61176,4706	Ö-4x14W	1750	4	8,7395
A1-732	Supplement Crimes Prosecutor	3,5	6,5	200	0,65	0,255	20991,9262	Ö-4x14W	1750	4	2,99885
A1-733	Supplement Crimes Prosecutor	3,5	6,5	200	0,65	0,255	20991,9262	Ö-4x14W	1750	4	2,99885
A1-734	Supplement Crimes Prosecutor	3,5	6,5	200	0,65	0,255	20991,9262	Ö-4x14W	1750	4	2,99885

A1 BLOCK	ROOM NAME	A	B	E	k	η	ØT	LUM TYPES	ØL	Z	N
A1-739	Supplement Crimes Prosecutor	7,5	11	200	1,274131274	0,41	47345,7676	Ö-4x14W	1750	4	6,76368
A1-740	Supplement Crimes Clerical Office	7	7	400	1	0,36	64052,2876	Ö-4x14W	1750	4	9,15033
A1-741	Supplement Crimes Prosecutor	3,5	7	200	0,666666667	0,26	22171,9457	Ö-4x14W	1750	4	3,16742
A1-742	Supplement Crimes Prosecutor	3,5	7	200	0,666666667	0,26	22171,9457	Ö-4x14W	1750	4	3,16742
A1-743	Supplement Crimes Prosecutor	3,5	7	200	0,666666667	0,26	22171,9457	Ö-4x14W	1750	4	3,16742
A1-744	Supplement Crimes Prosecutor	3,5	7	200	0,666666667	0,26	22171,9457	Ö-4x14W	1750	4	3,16742
A1-745	Correspondence Crimes Prosecutor	3,5	7	200	0,666666667	0,26	22171,9457	Ö-4x14W	1750	4	3,16742
A1-748	Correspondence Prosecutor	3,5	6,5	200	0,65	0,255	20991,9262	Ö-4x14W	1750	4	2,99885
A1-749	Correspondence Clerical Office	7	6,5	400	0,962962963	0,35	61176,4706	Ö-4x14W	1750	4	8,7395
A1-750	Correspondence Clerical Office	7	6,5	400	0,962962963	0,35	61176,4706	Ö-4x14W	1750	4	8,7395
B1 BLOCK	**ROOM NAME**	**A**	**B**	**E**	**k**	**η**	**ØT**	**LUM TYPES**	**ØL**	**Z**	**N**
B1-702	Electricity	3,5	8	50	0,695652174	0,27	6100,21786	P1-1x36W	2350	1	2,59584
B1-705	Lawyer Resting Room	5,5	12	200	1,07755102	0,37	41971,3831	Ö-4x14W	1750	4	5,99591
B2 BLOCK	**ROOM NAME**	**A**	**B**	**E**	**k**	**η**	**ØT (lm)**	**LUM TYPES**	**ØL**	**Z**	**N**
B2-702	Public Prosecutor	3,5	6	200	0,631578947	0,25	19764,7059	Ö-4x14W	1750	4	2,82353
B2-703	Public Prosecutor	3,5	6	200	0,631578947	0,25	19764,7059	Ö-4x14W	1750	4	2,82353
B2-704	Public Prosecutor	3,5	6	200	0,631578947	0,25	19764,7059	Ö-4x14W	1750	4	2,82353
B2-705	Public Prosecutor	3,5	6	200	0,631578947	0,25	19764,7059	Ö-4x14W	1750	4	2,82353
B2-706	Public Prosecutor	3,5	6	200	0,631578947	0,25	19764,7059	Ö-4x14W	1750	4	2,82353
B2-707	Public Prosecutor	3,5	6	200	0,631578947	0,25	19764,7059	Ö-4x14W	1750	4	2,82353
B2-708	Public Prosecutor	3,5	6	200	0,631578947	0,25	19764,7059	Ö-4x14W	1750	4	2,82353
B2-709	Public Prosecutor	3,5	6	200	0,631578947	0,25	19764,7059	Ö-4x14W	1750	4	2,82353
B2-710	Public Prosecutor	3,5	6	200	0,631578947	0,25	19764,7059	Ö-4x14W	1750	4	2,82353
B2-711	Public Prosecutor	3,5	6	200	0,631578947	0,25	19764,7059	Ö-4x14W	1750	4	2,82353
B2-712	Public Prosecutor	3,5	6	200	0,631578947	0,25	19764,7059	Ö-4x14W	1750	4	2,82353
B2-713	Public Prosecutor	3,5	6	200	0,631578947	0,25	19764,7059	Ö-4x14W	1750	4	2,82353
B2-714	General Preparation Clerical Office	5,5	6	400	0,819875776	0,31	50094,8767	Ö-4x14W	1750	4	7,15641
B2-717	Public Prosecutor	3,5	6	200	0,631578947	0,25	19764,7059	Ö-4x14W	1750	4	2,82353
B2-718	Public Prosecutor	3,5	6	200	0,631578947	0,25	19764,7059	Ö-4x14W	1750	4	2,82353
B2-719	Public Prosecutor	3,5	6	200	0,631578947	0,25	19764,7059	Ö-4x14W	1750	4	2,82353
B2-722	General Preparation Clerical Office	5,5	6	400	0,819875776	0,31	50094,8767	Ö-4x14W	1750	4	7,15641

B2 BLOCK	ROOM NAME	A	B	E	k	η	ØT (lm)	LUM TYPES	ØL	Z	N
B2-724	General Preparation Clerical Office	5,5	6	400	0,819875776	0,31	50094,8767	Ö-4x14W	1750	4	7,15641
B2-727	Public Prosecutor	3,5	6	200	0,631578947	0,25	19764,7059	Ö-4x14W	1750	4	2,82353
B2-728	Public Prosecutor	3,5	6	200	0,631578947	0,25	19764,7059	Ö-4x14W	1750	4	2,82353
B2-729	Public Prosecutor	3,5	6	200	0,631578947	0,25	19764,7059	Ö-4x14W	1750	4	2,82353
B2-732	Public Prosecutor	3,5	6	200	0,631578947	0,25	19764,7059	Ö-4x14W	1750	4	2,82353
B2-733	Public Prosecutor	3,5	6	200	0,631578947	0,25	19764,7059	Ö-4x14W	1750	4	2,82353
B2-734	Public Prosecutor	3,5	6	200	0,631578947	0,25	19764,7059	Ö-4x14W	1750	4	2,82353
B2-737	General Preparation Clerical Office	5	6	400	0,779220779	0,3	47058,8235	Ö-4x14W	1750	4	6,72269
B2-740	Public Prosecutor	3,5	6	200	0,631578947	0,25	19764,7059	Ö-4x14W	1750	4	2,82353
B2-741	Public Prosecutor	3,5	6	200	0,631578947	0,25	19764,7059	Ö-4x14W	1750	4	2,82353
B2-742	Public Prosecutor	3,5	6	200	0,631578947	0,25	19764,7059	Ö-4x14W	1750	4	2,82353
B2-743	Public Prosecutor	3,5	6	200	0,631578947	0,25	19764,7059	Ö-4x14W	1750	4	2,82353
B2-744	Public Prosecutor	3,5	6	200	0,631578947	0,25	19764,7059	Ö-4x14W	1750	4	2,82353
B2-745	Public Prosecutor	3,5	6	200	0,631578947	0,25	19764,7059	Ö-4x14W	1750	4	2,82353
B2-746	Public Prosecutor	3,5	6	200	0,631578947	0,25	19764,7059	Ö-4x14W	1750	4	2,82353
B2-747	Public Prosecutor	3,5	6	200	0,631578947	0,25	19764,7059	Ö-4x14W	1750	4	2,82353
B2-748	Public Prosecutor	3,5	6	200	0,631578947	0,25	19764,7059	Ö-4x14W	1750	4	2,82353
B2-749	Public Prosecutor	3,5	6	200	0,631578947	0,25	19764,7059	Ö-4x14W	1750	4	2,82353
B2-750	Public Prosecutor	3,5	6	200	0,631578947	0,25	19764,7059	Ö-4x14W	1750	4	2,82353
B2-751	Public Prosecutor	3,5	6	200	0,631578947	0,25	19764,7059	Ö-4x14W	1750	4	2,82353
B2-752	Public Prosecutor	3,5	6	200	0,631578947	0,25	19764,7059	Ö-4x14W	1750	4	2,82353
B2-753	Public Prosecutor	3,5	6	200	0,631578947	0,25	19764,7059	Ö-4x14W	1750	4	2,82353
B2-754	Public Prosecutor	3,5	6	200	0,631578947	0,25	19764,7059	Ö-4x14W	1750	4	2,82353
B2-755	Public Prosecutor	3,5	6	200	0,631578947	0,25	19764,7059	Ö-4x14W	1750	4	2,82353
B2-756	Public Prosecutor	3,5	6	200	0,631578947	0,25	19764,7059	Ö-4x14W	1750	4	2,82353
B2-757	Public Prosecutor	3,5	6	200	0,631578947	0,25	19764,7059	Ö-4x14W	1750	4	2,82353
B3 BLOCK	**ROOM NAME**	**A (m)**	**B (m)**	**E (lx)**	**k**	**η**	**ØT (lm)**	**LUM TYPES**	**ØL (lm)**	**Z**	**N**
B3-707	Public Prosecutor	3,5	6	200	0,631578947	0,25	19764,7059	Ö-4x14W	1750	4	2,82353
B3-708	Public Prosecutor	3,5	6	200	0,631578947	0,25	19764,7059	Ö-4x14W	1750	4	2,82353
B3-709	Public Prosecutor	3,5	6	200	0,631578947	0,25	19764,7059	Ö-4x14W	1750	4	2,82353
B3-710	Public Prosecutor	3,5	6	200	0,631578947	0,25	19764,7059	Ö-4x14W	1750	4	2,82353
B3-711	Public Prosecutor	3,5	6	200	0,631578947	0,25	19764,7059	Ö-4x14W	1750	4	2,82353

B3 BLOCK	ROOM NAME	A (m)	B (m)	E (lx)	k	η	ØT (lm)	LUM TYPES	ØL (lm)	Z	N
B3-712	Public Prosecutor	3,5	6	200	0,631578947	0,25	19764,7059	Ö-4x14W	1750	4	2,82353
B3-713	Public Prosecutor	3,5	6	200	0,631578947	0,25	19764,7059	Ö-4x14W	1750	4	2,82353
B3-714	Public Prosecutor	3,5	6	200	0,631578947	0,25	19764,7059	Ö-4x14W	1750	4	2,82353
B3-715	Public Prosecutor	3,5	6	200	0,631578947	0,25	19764,7059	Ö-4x14W	1750	4	2,82353
B3-716	Public Prosecutor	3,5	6	200	0,631578947	0,25	19764,7059	Ö-4x14W	1750	4	2,82353
B3-717	Public Prosecutor	3,5	6	200	0,631578947	0,25	19764,7059	Ö-4x14W	1750	4	2,82353
B3-718	Public Prosecutor	3,5	6	200	0,631578947	0,25	19764,7059	Ö-4x14W	1750	4	2,82353
B3-719	Public Prosecutor	3,5	6	200	0,631578947	0,25	19764,7059	Ö-4x14W	1750	4	2,82353
B3-720	Public Prosecutor	3,5	6	200	0,631578947	0,25	19764,7059	Ö-4x14W	1750	4	2,82353
B3-721	Public Prosecutor	3,5	6	200	0,631578947	0,25	19764,7059	Ö-4x14W	1750	4	2,82353
B3-722	Public Prosecutor	3,5	6	200	0,631578947	0,25	19764,7059	Ö-4x14W	1750	4	2,82353
B3-723	Public Prosecutor	3,5	6	200	0,631578947	0,25	19764,7059	Ö-4x14W	1750	4	2,82353
B3-724	Public Prosecutor	3,5	6	200	0,631578947	0,25	19764,7059	Ö-4x14W	1750	4	2,82353
B3-725	Public Prosecutor	3,5	6	200	0,631578947	0,25	19764,7059	Ö-4x14W	1750	4	2,82353
B3-726	Public Prosecutor	3,5	6	200	0,631578947	0,25	19764,7059	Ö-4x14W	1750	4	2,82353
B3-729	General Preparation Clerical office	6	7	400	0,923076923	0,34	58131,4879	Ö-4x14W	1750	4	8,3045
B3-732	Public Prosecutor	3,5	6	200	0,631578947	0,26	19004,5249	Ö-4x14W	1750	4	2,71493
B3-733	Public Prosecutor	3,5	6	200	0,631578947	0,26	19004,5249	Ö-4x14W	1750	4	2,71493
B3-734	Public Prosecutor	3,5	6	200	0,631578947	0,26	19004,5249	Ö-4x14W	1750	4	2,71493
B3-737	Public Prosecutor	3,5	6	200	0,631578947	0,26	19004,5249	Ö-4x14W	1750	4	2,71493
B3-738	Public Prosecutor	3,5	6	200	0,631578947	0,26	19004,5249	Ö-4x14W	1750	4	2,71493
B3-739	Public Prosecutor	3,5	6	200	0,631578947	0,26	19004,5249	Ö-4x14W	1750	4	2,71493
B3-742	General Preparation Clerical office	6	7	400	0,923076923	0,34	58131,4879	Ö-4x14W	1750	4	8,3045
C1 BLOCK	ROOM NAME	A (m)	B (m)	E (lx)	k	η	ØT (lm)	LUM TYPES	ØL (lm)	Z	N
C1-702	Juvenile Court Trial Hall	7	8	250	1,066666667	0,37	44515,1033	Ö-4x14W	1750	4	6,3593
C1-702	Juvenile Court Trial Hall	7	8	250	1,066666667	0,37	44515,1033	Ö-2x18W	1800	2	12,3653
C1-703	Juvenile Court Trial Hall	6	8	250	0,979591837	0,35	40336,1345	Ö-4x14W	1750	4	5,7623
C1-703	Juvenile Court Trial Hall	6	8	250	0,979591837	0,35	40336,1345	Ö-2x18W	1800	2	11,2045
C1-704	Juvenile Court Trial Hall	6	8	250	0,979591837	0,35	40336,1345	Ö-4x14W	1750	4	5,7623
C1-704	Juvenile Court Trial Hall	6	8	250	0,979591837	0,35	40336,1345	Ö-2x18W	1800	2	11,2045
C1-705	Juvenile Court Trial Hall	6	8	250	0,979591837	0,35	40336,1345	Ö-4x14W	1750	4	5,7623
C1-705	Juvenile Court Trial Hall	6	8	250	0,979591837	0,35	40336,1345	Ö-2x18W	1800	2	11,2045

C1 BLOCK	ROOM NAME	A (m)	B (m)	E (lx)	k	η	ØT (lm)	LUM TYPES	ØL (lm)	Z	N
C1-706	Juvenile Court Trial Hall	6	8	250	0,979591837	0,35	40336,1345	Ö-4x14W	1750	4	5,7623
C1-706	Juvenile Court Trial Hall	6	8	250	0,979591837	0,35	40336,1345	Ö-2x18W	1800	2	11,2045
C1-707	Juvenile Court Trial Hall	6	8	250	0,979591837	0,35	40336,1345	Ö-4x14W	1750	4	5,7623
C1-707	Juvenile Court Trial Hall	6	8	250	0,979591837	0,35	40336,1345	Ö-2x18W	1800	2	11,2045
C1-708	Juvenile Court Trial Hall	6	8	250	0,979591837	0,35	40336,1345	Ö-4x14W	1750	4	5,7623
C1-708	Juvenile Court Trial Hall	6	8	250	0,979591837	0,35	40336,1345	Ö-2x18W	1800	2	11,2045
C1-709	Juvenile Court Trial Hall	6	8	250	0,979591837	0,35	40336,1345	Ö-4x14W	1750	4	5,7623
C1-709	Juvenile Court Trial Hall	6	8	250	0,979591837	0,35	40336,1345	Ö-2x18W	1800	2	11,2045
C1-713	Store	4	10	200	0,816326531	0,32	29411,7647	ATY2-4x18W	1350	4	5,44662
C1-716	Store	4	9	200	0,791208791	0,3	28235,2941	ATY2-4x18W	1350	4	5,22876
C1-719	Store	4	10	200	0,816326531	0,32	29411,7647	ATY2-4x18W	1350	4	5,44662
C1-724	Juvenile Court Judge Room	3,5	6	250	0,631578947	0,25	24705,8824	Ö-4x14W	1750	4	3,52941
C1-725	Room	3,5	6	200	0,631578947	0,25	19764,7059	Ö-4x14W	1750	4	2,82353
C1-726	Juvenile Court Clerical Office	7	6,5	250	0,962962963	0,35	38235,2941	Ö-4x14W	1750	4	5,46218
C1-727	Juvenile Court Judge Room	7	6,5	250	0,962962963	0,35	38235,2941	Ö-4x14W	1750	4	5,46218
C1-729	Juvenile Court Judge Room	3,5	6,5	250	0,65	0,26	25735,2941	Ö-4x14W	1750	4	3,67647
C1-730	Juvenile Court Clerical Office	7	6,5	250	0,962962963	0,35	38235,2941	Ö-4x14W	1750	4	5,46218
C1-731	Juvenile Court Judge Room	3,5	6,5	250	0,65	0,26	25735,2941	Ö-4x14W	1750	4	3,67647
C1-732	Juvenile Court Judge Room	3,5	6,5	250	0,65	0,26	25735,2941	Ö-4x14W	1750	4	3,67647
C1-733	Juvenile Court Clerical Office	7	6,5	250	0,962962963	0,35	38235,2941	Ö-4x14W	1750	4	5,46218
C1-734	Juvenile Court Clerical Office	7	6,5	250	0,962962963	0,35	38235,2941	Ö-4x14W	1750	4	5,46218
C1-735	Juvenile Court Judge Room	3,5	6,5	250	0,65	0,26	25735,2941	Ö-4x14W	1750	4	3,67647
C1-736	Executing Judge Room	3,5	6,5	250	0,65	0,26	25735,2941	Ö-4x14W	1750	4	3,67647
C1-737	Executing Judg. Clerical Office	7	6,5	250	0,962962963	0,35	38235,2941	Ö-4x14W	1750	4	5,46218
C3 BLOCK	ROOM NAME	A (m)	B (m)	E (lx)	k	η	ØT (lm)	LUM TYPES	ØL (lm)	Z	N
C3-702	Juvenile Court Trial Hall	7	8	250	1,066666667	0,37	44515,1033	Ö-4x14W	1750	4	6,3593
C3-703	Juvenile Court Trial Hall	7	8	250	1,066666667	0,37	44515,1033	Ö-2x18W	1800	2	12,3653
C3-703	Juvenile Court Trial Hall	7	8	250	1,066666667	0,37	44515,1033	Ö-4x14W	1750	4	6,3593
C3-703	Juvenile Court Trial Hall	7	8	250	1,066666667	0,37	44515,1033	Ö-2x18W	1800	2	12,3653
C3-704	Juvenile Court Trial Hall	7	8	250	1,066666667	0,37	44515,1033	Ö-4x14W	1750	4	6,3593
C3-704	Juvenile Court Trial Hall	7	8	250	1,066666667	0,37	44515,1033	Ö-2x18W	1800	2	12,3653
C3-705	Juvenile Court Trial Hall	7	8	250	1,066666667	0,37	44515,1033	Ö-4x14W	1750	4	6,3593

C3 BLOCK	ROOM NAME	A (m)	B (m)	E (lx)	k	η	ØT (lm)	LUM TYPES	ØL (lm)	Z	N
C3-705	Juvenile Court Trial Hall	7	8	250	1,066666667	0,37	44515,1033	Ö-2x18W	1800	2	12,3653
C3-706	Juvenile Court Trial Hall	7	8	250	1,066666667	0,37	44515,1033	Ö-4x14W	1750	4	6,3593
C3-706	Juvenile Court Trial Hall	7	8	250	1,066666667	0,37	44515,1033	Ö-2x18W	1800	2	12,3653
C3-707	Juvenile Court Trial Hall	7	8	250	1,066666667	0,37	44515,1033	Ö-4x14W	1750	4	6,3593
C3-707	Juvenile Court Trial Hall	7	8	250	1,066666667	0,37	44515,1033	Ö-2x18W	1800	2	12,3653
C3-708	Juvenile Court Trial Hall	7	8	250	1,066666667	0,37	44515,1033	Ö-4x14W	1750	4	6,3593
C3-708	Juvenile Court Trial Hall	7	8	250	1,066666667	0,37	44515,1033	Ö-2x18W	1800	2	12,3653
C3-709	Juvenile Court Trial Hall	7	8	250	1,066666667	0,37	44515,1033	Ö-4x14W	1750	4	6,3593
C3-709	Reserve Trial Hall	7	8	250	1,066666667	0,37	44515,1033	Ö-2x18W	1800	2	12,3653
C3-713	Store	9	4	200	0,791208791	0,3	28235,2941	ATY2-4x18W	1350	4	5,22876
C3-719	Store	9	4	200	0,791208791	0,3	28235,2941	ATY2-4x18W	1350	4	5,22876
C3-722	Store	4	4,5	200	0,605042017	0,24	17647,0588	ATY2-4x18W	1350	4	3,26797
C3-724	Juvenile Court Judge Room	3,5	6	200	0,631578947	0,25	19764,7059	Ö-4x14W	1750	4	2,82353
C3-725	Juvenile Court Judge Room	7,5	6	200	0,952380952	0,35	30252,1008	Ö-4x14W	1750	4	4,32173
C3-726	Juvenile Court Judge Room	7,5	6	200	0,952380952	0,35	30252,1008	Ö-4x14W	1750	4	4,32173
C3-727	Juvenile Court Judge Room	3,5	6	200	0,631578947	0,25	19764,7059	Ö-4x14W	1750	4	2,82353
C3-729	Room	3,5	6	200	0,631578947	0,25	19764,7059	Ö-4x14W	1750	4	2,82353
C3-736	Juvenile Court Clerical Office	7	6,5	250	0,962962963	0,35	38235,2941	Ö-4x14W	1750	4	5,46218
C3-737	Juvenile Court Clerical Office	7	6,5	250	0,962962963	0,35	38235,2941	Ö-4x14W	1750	4	5,46218
C3-738	Juvenile Court Judge Room	3,5	6,5	200	0,65	0,26	20588,2353	Ö-4x14W	1750	4	2,94118
C3-739	Juvenile Court Judge Room	3,5	6,5	200	0,65	0,26	20588,2353	Ö-4x14W	1750	4	2,94118
C3-740	Juvenile Court Clerical Office	7	6,5	250	0,962962963	0,35	38235,2941	Ö-4x14W	1750	4	5,46218
C3-741	Juvenile Court Judge Room	3,5	6,5	200	0,65	0,26	20588,2353	Ö-4x14W	1750	4	2,94118
C3-742	Juvenile Court Judge Room	3,5	6,5	200	0,65	0,26	20588,2353	Ö-4x14W	1750	4	2,94118
C3-743	Juvenile Court Clerical Office	7	6,5	250	0,962962963	0,35	38235,2941	Ö-4x14W	1750	4	5,46218
C3-744	Juvenile Court Clerical Office	7	6,5	250	0,962962963	0,35	38235,2941	Ö-4x14W	1750	4	5,46218
C3-745	Juvenile Court Judge Room	3,5	6,5	200	0,65	0,26	20588,2353	Ö-4x14W	1750	4	2,94118
C3-746	Executing Judge Room	3,5	6,5	200	0,65	0,26	20588,2353	Ö-4x14W	1750	4	2,94118
C3-747	Executing Judgge Clerical Office	7	6,5	250	0,962962963	0,35	38235,2941	Ö-4x14W	1750	4	5,46218
D1 BLOCK	ROOM NAME	A (m)	B (m)	E (lx)	k	η	ØT (lm)	LUM TYPES	ØL (lm)	Z	N
D1-705	Lawyer Resting Room	5,5	11,5	200	1,06302521	0,37	40222,5755	Ö-4x14W	1750	4	5,74608

D2 BLOCK	ROOM NAME	A (m)	B (m)	E (lx)	k	η	ØT (lm)	LUM TYPES	ØL (lm)	Z	N
D2 -702	Public Prosecutor	3,5	6	200	0,631578947	0,25	19764,7059	Ö-4x14W	1750	4	2,82353
D2 -703	Public Prosecutor	3,5	6	200	0,631578947	0,25	19764,7059	Ö-4x14W	1750	4	2,82353
D2 -704	Public Prosecutor	3,5	6	200	0,631578947	0,25	19764,7059	Ö-4x14W	1750	2	5,64706
D2 -705	Public Prosecutor	3,5	6	200	0,631578947	0,25	19764,7059	Ö-4x14W	1750	4	2,82353
D2 -706	Public Prosecutor	3,5	6	200	0,631578947	0,25	19764,7059	Ö-4x14W	1750	2	5,64706
D2 -707	Public Prosecutor	3,5	6	200	0,631578947	0,25	19764,7059	Ö-4x14W	1750	4	2,82353
D2 -708	Public Prosecutor	3,5	6	200	0,631578947	0,25	19764,7059	Ö-4x14W	1750	2	5,64706
D2 -709	Public Prosecutor	3,5	6	200	0,631578947	0,25	19764,7059	Ö-4x14W	1750	4	2,82353
D2 -710	Public Prosecutor	3,5	6	200	0,631578947	0,25	19764,7059	Ö-4x14W	1750	2	5,64706
D2 -711	Public Prosecutor	3,5	6	200	0,631578947	0,25	19764,7059	Ö-4x14W	1750	4	2,82353
D2 -712	Public Prosecutor	3,5	6	200	0,631578947	0,25	19764,7059	Ö-4x14W	1750	2	5,64706
D2 -713	Public Prosecutor	3,5	6	200	0,631578947	0,25	19764,7059	Ö-4x14W	1750	4	2,82353
D2 -714	Public Prosecutor	3,5	6	200	0,631578947	0,25	19764,7059	Ö-4x14W	1750	2	5,64706
D2 -715	Public Prosecutor	3,5	6	200	0,631578947	0,25	19764,7059	Ö-4x14W	1750	4	2,82353
D2 -716	Public Prosecutor	3,5	6	200	0,631578947	0,25	19764,7059	Ö-4x14W	1750	4	2,82353
D2 -718	General Preparation Clerical office	5,5	6	400	0,819875776	0,32	48529,4118	Ö-4x14W	1750	4	6,93277
D2 -721	Public Prosecutor	5,5	4	200	0,661654135	0,26	19909,5023	Ö-4x14W	1750	4	2,84421
D2 -723	Public Prosecutor	5,5	4	200	0,661654135	0,255	20299,8847	Ö-4x14W	1750	4	2,89998
D2 -726	General Preparation Clerical office	5,5	6	400	0,819875776	0,31	50094,8767	Ö-4x14W	1750	4	7,15641
D2 -730	General Preparation Clerical office	5,5	6	400	0,819875776	0,31	50094,8767	Ö-4x14W	1750	4	7,15641
D2 -733	Public Prosecutor	5,5	4	250	0,661654135	0,255	25374,8558	Ö-4x14W	1750	4	3,62498
D2 -735	Public Prosecutor	5,5	4	200	0,661654135	0,255	20299,8847	Ö-4x14W	1750	4	2,89998
D2 -738	Public Prosecutor	5,5	4	200	0,661654135	0,255	20299,8847	Ö-4x14W	1750	4	2,89998
D2 -740	Public Prosecutor	5,5	4	200	0,661654135	0,255	20299,8847	Ö-4x14W	1750	4	2,89998
D2 -743	General Preparation Clerical office	5,5	6	400	0,819875776	0,31	50094,8767	Ö-4x14W	1750	4	7,15641
D2 -747	Public Prosecutor	3,5	6	200	0,631578947	0,25	19764,7059	Ö-4x14W	1750	4	2,82353
D2 -748	Public Prosecutor	3,5	6	200	0,631578947	0,25	19764,7059	Ö-4x14W	1750	4	2,82353
D2 -749	Public Prosecutor	3,5	6	200	0,631578947	0,25	19764,7059	Ö-4x14W	1750	4	2,82353
D2 -750	Public Prosecutor	3,5	6	200	0,631578947	0,25	19764,7059	Ö-4x14W	1750	4	2,82353
D2 -751	Public Prosecutor	3,5	6	200	0,631578947	0,25	19764,7059	Ö-4x14W	1750	4	2,82353
D2 -752	Public Prosecutor	3,5	6	200	0,631578947	0,25	19764,7059	Ö-4x14W	1750	4	2,82353
D2 -753	Public Prosecutor	3,5	6	200	0,631578947	0,25	19764,7059	Ö-4x14W	1750	4	2,82353
D2 -754	Public Prosecutor	3,5	6	200	0,631578947	0,25	19764,7059	Ö-4x14W	1750	4	2,82353

D2 BLOCK	ROOM NAME	A (m)	B (m)	E (lx)	k	η	ØT (lm)	LUM TYPES	ØL (lm)	Z	N
D2 -755	Public Prosecutor	3,5	6	200	0,631578947	0,25	19764,7059	Ö-4x14W	1750	4	2,82353
D2 -756	Public Prosecutor	3,5	6	200	0,631578947	0,25	19764,7059	Ö-4x14W	1750	4	2,82353
D2 -757	Public Prosecutor	3,5	6	200	0,631578947	0,25	19764,7059	Ö-4x14W	1750	4	2,82353
D2 -758	Public Prosecutor	3,5	6	200	0,631578947	0,25	19764,7059	Ö-4x14W	1750	4	2,82353
D2 -759	Public Prosecutor	3,5	6	200	0,631578947	0,25	19764,7059	Ö-4x14W	1750	4	2,82353
D2 -760	Public Prosecutor	3,5	6	200	0,631578947	0,25	19764,7059	Ö-4x14W	1750	4	2,82353
D2 -761	Public Prosecutor	3,5	6	200	0,631578947	0,25	19764,7059	Ö-4x14W	1750	4	2,82353
D2 -762	Public Prosecutor	3,5	6	200	0,631578947	0,25	19764,7059	Ö-4x14W	1750	4	2,82353
D2 -763	Public Prosecutor	3,5	6	200	0,631578947	0,25	19764,7059	Ö-4x14W	1750	4	2,82353
D2 -764	Public Prosecutor	3,5	6	200	0,631578947	0,25	19764,7059	Ö-4x14W	1750	4	2,82353
D2 -765	Public Prosecutor	3,5	6	200	0,631578947	0,25	19764,7059	Ö-4x14W	1750	4	2,82353
D2 -766	Public Prosecutor	3,5	6	200	0,631578947	0,25	19764,7059	Ö-4x14W	1750	4	2,82353
D2 -767	Public Prosecutor	3,5	6	200	0,631578947	0,25	19764,7059	Ö-4x14W	1750	4	2,82353
D2 -768	Public Prosecutor	3,5	6	200	0,631578947	0,25	19764,7059	Ö-4x14W	1750	4	2,82353
D3 BLOCK	ROOM NAME	A (m)	B (m)	E (lx)	k	η	ØT (lm)	LUM TYPES	ØL (lm)	Z	N
D3-707	Public Prosecutor	3,5	6	200	0,631578947	0,25	19764,7059	Ö-4x14W	1750	4	2,82353
D3-708	Public Prosecutor	3,5	6	200	0,631578947	0,25	19764,7059	Ö-4x14W	1750	4	2,82353
D3-709	Public Prosecutor	3,5	6	200	0,631578947	0,25	19764,7059	Ö-4x14W	1750	4	2,82353
D3-710	Public Prosecutor	3,5	6	200	0,631578947	0,25	19764,7059	Ö-4x14W	1750	4	2,82353
D3-711	Public Prosecutor	3,5	6	200	0,631578947	0,25	19764,7059	Ö-4x14W	1750	4	2,82353
D3-712	Public Prosecutor	3,5	6	200	0,631578947	0,25	19764,7059	Ö-4x14W	1750	4	2,82353
D3-713	Public Prosecutor	3,5	6	200	0,631578947	0,25	19764,7059	Ö-4x14W	1750	4	2,82353
D3-714	Public Prosecutor	3,5	6	200	0,631578947	0,25	19764,7059	Ö-4x14W	1750	4	2,82353
D3-715	Public Prosecutor	3,5	6	200	0,631578947	0,25	19764,7059	Ö-4x14W	1750	4	2,82353
D3-716	Public Prosecutor	3,5	6	200	0,631578947	0,25	19764,7059	Ö-4x14W	1750	4	2,82353
D3-717	Public Prosecutor	3,5	6	200	0,631578947	0,25	19764,7059	Ö-4x14W	1750	4	2,82353
D3-718	Public Prosecutor	3,5	6	200	0,631578947	0,25	19764,7059	Ö-4x14W	1750	4	2,82353
D3-719	Public Prosecutor	3,5	6	200	0,631578947	0,25	19764,7059	Ö-4x14W	1750	4	2,82353
D3-720	Public Prosecutor	3,5	6	200	0,631578947	0,25	19764,7059	Ö-4x14W	1750	4	2,82353
D3-721	Public Prosecutor	3,5	6	200	0,631578947	0,25	19764,7059	Ö-4x14W	1750	4	2,82353
D3-722	Public Prosecutor	3,5	6	200	0,631578947	0,25	19764,7059	Ö-4x14W	1750	4	2,82353
D3-723	Public Prosecutor	3,5	6	200	0,631578947	0,25	19764,7059	Ö-4x14W	1750	4	2,82353

D3 BLOCK	ROOM NAME	A (m)	B (m)	E (lx)	k	η	ØT (lm)	LUM TYPES	ØL (lm)	Z	N
D3-724	Public Prosecutor	3,5	6	200	0,631578947	0,25	19764,7059	Ö-4x14W	1750	4	2,82353
D3-725	Public Prosecutor	3,5	6	200	0,631578947	0,25	19764,7059	Ö-4x14W	1750	4	2,82353
D3-726	Public Prosecutor	3,5	6	200	0,631578947	0,25	19764,7059	Ö-4x14W	1750	4	2,82353
D3-729	General Preparation Clerical office	6	7	400	0,923076923	0,34	58131,4879	Ö-4x14W	1750	4	8,3045
D3-732	Public Prosecutor	3,5	6	200	0,631578947	0,25	19764,7059	Ö-4x14W	1750	4	2,82353
D3-733	Public Prosecutor	3,5	6	200	0,631578947	0,25	19764,7059	Ö-4x14W	1750	4	2,82353
D3-734	Public Prosecutor	3,5	6	200	0,631578947	0,25	19764,7059	Ö-4x14W	1750	4	2,82353
D3-737	Public Prosecutor	3,5	6	200	0,631578947	0,25	19764,7059	Ö-4x14W	1750	4	2,82353
D3-738	Public Prosecutor	3,5	6	200	0,631578947	0,25	19764,7059	Ö-4x14W	1750	4	2,82353
D3-739	Public Prosecutor	3,5	6	200	0,631578947	0,25	19764,7059	Ö-4x14W	1750	4	2,82353
D3-742	General Preparation Clerical office	6	7	400	0,923076923	0,34	58131,4879	Ö-4x14W	1750	4	8,3045

A1 BLOCK	ROOM NAME	LUM.TYPES	Z	P	N	L.T.P	E.S	E.S.P	TEL	DATA	TV
A1-3B01	Main Distribution Arterial	ATY2-4x18W	4	18	48	3456	1	300			
A1-3B01	Main Distribution Arterial	Ö-4X14W	4	14	8	448					
A1-3B02	Electric Room	P1-2x36W	2	36	1	72	2	600			
A1-3B03	Floor Hall	Ö-2x18W	2	18	4	144					
A1-3B04	Airing Cental	Ö-1x58W	1	58	52	3016					
A1-3B05	Fire security Hall	Ö-1X28W	1	28	1	28					
A1-3B06	Fire Escape	Ö-1X28W	1	28	2	56					
A1-3B07	Hall	Ö-2x18W	2	18	4	144					
A1-3B08	Sevice Stairs	Ö-1X28W	1	28	2	56					
A1-3B09	Man WC	Ö-1x36W	1	36	3	108	2	2300			
A1-3B09	Man WC	T1-1x18W	1	18	3	54					
A1-3B10	Cleaning Room	Ö-1x36W	1	36	1	36					
A1-3B11	Women WC	Ö-1x36W	1	36	3	108	2	2300			
A1-3B11	Women WC	T1-1x18W	1	18	4	72					
A1-3B12	Hall	Ö-1x18W	1	18	4	72					
A1-3B13	Judicial Register Entrance	Ö-2x18W	2	18	58	2088	10	3000	10	10	
A1-3B13	Judicial Register Entrance	ATY2-4x18W	4	18	8	576					
A1-3B14	Interrogation Room	Ö-4X14W	4	14	13	728	10	3000	10	10	
A1-3B15	Judicial Register Chief Room	Ö-4X14W	4	14	3	168	3	900	1	1	1
A1-3B16	Judicial Register Clerical Office	Ö-4X14W	4	14	5	280	5	1500	5	5	
A1-3B17	Interrogation Room	Ö-4X14W	4	14	13	728	10	3000	10	10	
A1-3B18	PTT Store Room	ATY2-4x18W	4	18	16	1152	3	900			
A1-3B19	Store Room	ATY2-4x18W	4	18	9	648	2	600			
A1-3B20	Electric Room	P1-2x36W	2	36	1	72	1	300			
A1-3B21	Floor Hall	Ö-2x18W	2	18	4	144	1	300			
A1-3B21	Floor Hall	Ö-1X28W	1	28	2	56					
A1-3B21	Floor Hall	P1-1x36W	1	36	26	936					
A1-3B22	Office Stock Room	Ö-2x18W	2	18	17	612	2	600	1	1	

A1 BLOCK	ROOM NAME	LUM.TYPES	Z	P	N	L.T.P	E.S	E.S.P	TEL	DATA	TV
A1-3B23	Store Room	ATY2-4x18W	4	18	3	216	1	300			
A1-3B24	Office Stock Room	ATY2-4x18W	4	18	12	864	3	900	1	1	
A1-3B25	Corridor	Ö-2x18W	2	18	86	3096					
A1-3B26	Sevice Stairs	Ö-1X28W	1	28	2	56					
A1-3B27	Preperation Room	P1-2x36W	2	36	3	216	3	900			
A1-3B28	Defective WC	P1-1x36W	1	36	1	36	2	2300			
A1-3B29	Preperation Room	P1-2x36W	2	36	3	216	3	900			
A1-3B30	Defective WC	P1-1x36W	1	36	1	36	1	300			
A1-3B31	Back Scene Hall	Ö-2x18W	2	18	14	504					
A1-3B32	Office Stock Room	P1-2x36W	2	36	1	72	1	300	1	1	
A1-3B33	Office Stock Room	P1-2x36W	2	36	4	288	1	300	1	1	
A1-3B34	Fire Escape	Ö-1X28W	1	28	2	56					
A1-3B35	Fire security Hall	Ö-1X28W	1	28	1	28					
A1-3B36	Office Stock Room	Ö-4X14W	4	14	3	168	2	600	1	1	
A1-3B37	Standby Room	Ö-4X14W	4	14	12	672	2	600	1	1	
A2 BLOCK	**ROOM NAME**	**LUM.TYPES**	**Z**	**P**	**N**	**L.T.P**	**E.S**	**E.S.P**	**TEL**	**DATA**	**TV**
A2-3B01	Resting Room	ATY2-4x18W	4	18	2	144	1	300			
A2-3B02	Man WC	P1-1x36W	1	36	1	36	2	2300			
A2-3B02	Man WC	P1-1x18W	1	18	1	18					
A2-3B03	Women WC	P1-1x36W	1	36	1	36	1	2300			
A2-3B03	Women WC	P1-1x18W	1	18	1	18					
A2-3B04	Hall	Ö-2x18W	2	18	5	180					
A2-3B05	Store Room	ATY2-4x18W	4	18	1	72	1	300			
A2-3B06	Store Room	ATY2-4x18W	4	18	1	72	1	300			
A2-3B07	PTT Distribution Hall	Ö-2x18W	2	18	16	576					
A2-3B08	Entrance Hall	Ö-2x18W	2	18	17	612					
A2-3B09	Conferance Hall	Ö-2x18W	2	18	143	5148	6	1800	3	3	

A2 BLOCK	ROOM NAME	LUM.TYPES	Z	P	N	L.T.P	E.S	E.S.P	TEL	DATA	TV
A2-3B10	Entrance Hall	Ö-2x18W	2	18	16	576					
A2-3B11	Simultane	Ö-1x36W	1	36	1	36	1	300	1	1	
A2-3B12	Simultane	Ö-1x36W	1	36	1	36	1	300	1	1	
A2-3B13	Technical Room	Ö-1x36W	1	36	2	72	2	600	2	2	
A2-3B14	Simultane	Ö-1x36W	1	36	1	36	1	300	1	1	
A2-3B15	Simultane	Ö-1x36W	1	36	1	36	1	300	1	1	
A2-3B16	WC	Ö-1x18W	1	18	2	36					
A2-3B17	Technical Service Hall	Ö-2x18W	2	18	19	684	2	600			
A2-3B18	Office Stock Room	P1-2x36W	2	36	23	1656	3	900			
A2-3B19	Airing Cental	P1-2x36W	2	36	8	576					
A3BLOCK	**ROOM NAME**	**LUM.TYPES**	**Z**	**P**	**N**	**L.T.P**	**E.S**	**E.S.P**	**TEL**	**DATA**	**TV**
A3-3B01	Airing Cental	Ö-1x58W	1	58	36	2088					
A3-3B02	Office Stock Room	P1-2x36W	2	36	13	936	2	600			
B1 BLOCK	**ROOM NAME**	**LUM.TYPES**	**Z**	**P**	**N**	**L.T.P**	**E.S**	**E.S.P**	**TEL**	**DATA**	**TV**
B1-3B01	Main Distribution Arterial	ATY2-4x18W	4	18	20	1440	1	300			
B1-3B01	Main Distribution Arterial	Ö-2x18W	2	18	6	216					
B1-3B02	Electric Room	P1-2x36W	2	36	3	216	1	300			
B1-3B03	Fire Escape	Ö-1X28W	1	28	2	56					
B1-3B04	Fire security Hall	Ö-1X28W	1	28	1	28					
B1-3B05	Lawyer Dinning Hall	Ö-4X14W	4	14	6	336	5	3200			1
B1-3B06	Women WC	Ö-1x36W	1	36	4	144	2	2300			
B1-3B06	Women WC	T1-1x18W	1	18	4	72					
B1-3B07	WC	Ö-1x36W	1	36	1	36	2	2300			
B1-3B08	Cleaning Room	P1-1x18W	1	18	1	18					
B1-3B09	Man WC	Ö-1x36W	1	36	6	216	2	2300			
B1-3B09	Man WC	T1-1x18W	1	18	4	72					

B1 BLOCK	ROOM NAME	LUM.TYPES	Z	P	N	L.T.P	E.S	E.S.P	TEL	DATA	TV
B1-3B10	Fire security Hall	Ö-1X28W	1	28	1	28					
B1-3B11	Fire Escape	Ö-1X28W	1	28	2	56					
B2 BLOCK	**ROOM NAME**	**LUM.TYPES**	**Z**	**P**	**N**	**L.T.P**	**E.S**	**E.S.P**	**TEL**	**DATA**	**TV**
B2-3B01	Hall	Ö-2x18W	2	18	4	144					
B2-3B02	Electric Room	P1-2x36W	2	36	1	72	1	300			
B2-3B03	Parking Hall	Ö-1x58W	1	58	138	8004					
B2-3B04	Store Room	P1-2x36W	2	36	3	216					
B2-3B05	Electric Room	P1-2x36W	2	36	1	72					
B2-3B06	Store Room	P1-2x36W	2	36	2	144					
B2-3B07	Store Room	P1-2x36W	2	36	3	216					
B2-3B08	Fire security Hall	Ö-1X28W	1	28	3	84					
B2-3B09	Fire Escape	Ö-1X28W	1	28	2	56					
B2-3B10	Parking Hall	Ö-1x58W	1	58	54	3132					
B3 BLOCK	**ROOM NAME**	**LUM.TYPES**	**Z**	**P**	**N**	**L.T.P**	**E.S**	**E.S.P**	**TEL**	**DATA**	**TV**
B3-3B01	Floor Hall	ATY2-4x18W	4	18	30	2160	2	600	1	1	
B3-3B01	Floor Hall	Ö-2x26W	2	26	32	1664					
B3-3B02	Electric Room	P1-2x36W	2	36	1	72	1	300			
B3-3B03	Electric Room	P1-2x36W	2	36	1	72	1	300			
B3-3B04	Electric Room	P1-2x36W	2	36	1	72	1	300			
B3-3B05	Store Room	P1-2x36W	2	36	2	144					
B3-3B06	Parking Hall	Ö-1x58W	1	58	58	3364					
B3-3B07	WC	Ö-1x18W	1	18	2	36	1	2000			
B3-3B08	Security Room	ATY2-4x18W	4	18	1	72	3	900	4	2	
B3-3B09	Control	ATY2-4x18W	4	18	1	72	1	300	2	1	
B3-3B10	Store Room	P1-2x36W	2	36	3	216					
B3-3B11	Fire Escape	Ö-1X28W	1	28	3	84					

B3 BLOCK	ROOM NAME	LUM.TYPES	Z	P	N	L.T.P	E.S	E.S.P	TEL	DATA	TV
B3-3B12	Store Room	P1-2x36W	2	36	3	216					
B3-3B13	Parking Hall	Ö-1x58W	1	58	61	3538					
C1 BLOCK	**ROOM NAME**	**LUM.TYPES**	**Z**	**P**	**N**	**L.T.P**	**E.S**	**E.S.P**	**TEL**	**DATA**	**TV**
C1-3B01	Inquiry Hall	ATY2-4x18W	4	18	12	864	1	300	2	1	
C1-3B01	Inquiry Hall	Ö-2x18W	2	18	6	216					
C1-3B02	Registration Room	Ö-4X14W	4	14	4	224	7	2100	5	5	
C1-3B03	Aplication Attorney Clerical	Ö-4X14W	4	14	4	224	7	2100	5	5	
C1-3B04	Prisoner Stair Hall	Ö-1X28W	1	28	1	28					
C1-3B05	Electric Room	P1-2x36W	2	36	1	72	1	300			
C1-3B06	Employee Room	Ö-1x36W	1	36	1	36	2	600			
C1-3B07	Police Station	Ö-4X14W	4	14	9	504	5	1500	4	4	
C1-3B08	Superior Room	Ö-4X14W	4	14	2	112	2	600	2	1	
C1-3B09	Store Room	P1-2x36W	2	36	1	72	1	300			
C1-3B10	Prisoner Stair Hall	Ö-1X28W	1	28	1	28					
C1 BLOCK	ROOM NAME	LUM.TYPES	Z	P	N	L.T.P	E.S	E.S.P	TEL	DATA	TV
C1-3B11	Surveillance	P1-2x36W	2	36	2	144					
C1-3B12	WC	Ö-1x36W	1	36	1	36					
C1-3B13	Corridor	ATY2-4x18W	4	18	6	432	2	600			
C1-3B13	Corridor	Ö-1x36W	1	36	50	1800					
C1-3B13	Corridor	Ö-2x18W	2	18	33	1188					
C1-3B14	Stair Exit	Ö-1X28W	1	28	1	28					
C1-3B14	Meeting Room	Ö-4X14W	4	14	6	336	4	1200	3	3	
C1-3B15	Reference Attorney General	Ö-4X14W	4	14	3	168	3	900	2	1	1
C1-3B16	Reference Attorney General	Ö-4X14W	4	14	3	168	3	900	2	1	1
C1-3B17	Reference Attorney General	Ö-4X14W	4	14	3	168	3	900	2	1	1
C1-3B18	Reference Attorney General	Ö-4X14W	4	14	3	168	3	900	2	1	1
C1-3B19	Reference Attorney General	Ö-4X14W	4	14	3	168	3	900	2	1	1

C1 BLOCK	ROOM NAME	LUM.TYPES	Z	P	N	L.T.P	E.S	E.S.P	TEL	DATA	TV
C1-3B20	Reference Attorney General	Ö-4X14W	4	14	3	168	3	900	2	1	1
C1-3B21	Fire Escape	Ö-1X28W	1	28	3	84					
C1-3B22	Store Room	P1-1x36W	1	36	1	36					
C1-3B23	Tea Office	Ö-1x36W	1	36	1	36	3	900			
C1-3B24	Women WC	Ö-1x36W	1	36	2	72	2	2300			
C1-3B25	Man WC	Ö-1x36W	1	36	2	72	2	2300			
C1-3B26	Reference Attorney Clerical	Ö-4X14W	4	14	6	336	7	2100	6	6	
C1-3B27	Reference Attorney Clerical	Ö-4X14W	4	14	8	448	9	2700	8	8	
C1-3B28	Judicial Doctor	Ö-4X14W	4	14	3	168	3	900	1	1	1
C1-3B29	Judicial Inspection	Ö-4X14W	4	14	3	168	3	900	1	1	1
C1-3B30	Judicial Inspection Clerical	Ö-4X14W	4	14	3	168	4	1200	3	3	
C1-3B31	Execution Attorney General	Ö-4X14W	4	14	3	168	3	900	1	1	
C1-3B32	Execution Attorney General	Ö-4X14W	4	14	3	168	3	900	1	1	
C1-3B33	Execution Attorney General	Ö-4X14W	4	14	3	168	3	900	1	1	
C1-3B34	Execution Attorney Clerical	Ö-4X14W	4	14	6	336	7	2100	6	6	
C1-3B35	Pay-Office	Ö-4X14W	4	14	3	168	4	1200	3	3	
C1-3B36	Execution Attorney Clerical	Ö-4X14W	4	14	6	336	7	2100	6	6	
C1-3B37	Execution Attorney General	Ö-4X14W	4	14	3	168	3	900	1	1	
C1-3B38	Execution Attorney General	Ö-4X14W	4	14	3	168	3	900	1	1	
C1-3B39	Execution Attorney General	Ö-4X14W	4	14	3	168	3	900	1	1	
C1-3B40	Prisoner Hall	Ö-2x18W	2	18	2	72					
C1 BLOCK	ROOM NAME	LUM.TYPES	Z	P	N	L.T.P	E.S	E.S.P	TEL	DATA	TV
C1-3B41	Surveillance	P1-2x36W	2	36	2	144					
C1-3B42	WC	P1-2x18W	2	18	2	72					
C1-3B43	Man WC	Ö-1x36W	1	36	3	108	2	2300			
C1-3B44	Women WC	Ö-1x36W	1	36	3	108	2	2300			
C1-3B45	Defective WC	P1-2x18W	2	18	2	72					
C1-3B46	Surveillance	P1-2x36W	2	36	2	144					

C1 BLOCK	ROOM NAME	LUM.TYPES	Z	P	N	L.T.P	E.S	E.S.P	TEL	DATA	TV
C1-3B47	Prisoner Hall	Ö-2x18W	2	18	2	72					
C1-3B48	Prisoner Stair Hall	Ö-1x28W	1	28	1	28					
C1-3B49	Photocopy Room	Ö-1x36W	1	36	1	36	2	600			
C1-3B50	Electric Room	P1-2x36W	2	36	1	72	1	300			
C1-3B51	Prisoner Stair Hall	Ö-1x28W	1	28	1	28					
C1-3B52	Execution Archives	Ö-4X14W	4	14	6	336	2	600	1	1	
C1-3B53	Man WC	Ö-1x36W	1	36	4	144	2	2300			
C1-3B54	Women WC	Ö-1x36W	1	36	2	72	2	2300			
C1-3B55	Hall	Ö-2x18W	2	18	2	72					
C1-3B56	Execution Attorney Clerical	Ö-4X14W	4	14	6	336	7	2100	5	5	
C1-3B57	Execution Attorney Clerical	Ö-4X14W	4	14	6	336	7	2100	5	5	
C1-3B58	Execution Attorney Clerical	Ö-4X14W	4	14	6	336	7	2100	5	5	
C1-3B59	Execution Attorney Clerical	Ö-4X14W	4	14	6	336	7	2100	5	5	
C1-3B60	Hall	ATY2-4x18W	4	18	20	1440	6	1800	3	2	
C1-3B60	Hall	Ö-2x18W	2	18	76	2736					
C1-3B60	Stair Exit	Ö-1X28W	1	28	1	28					
C3 BLOCK	ROOM NAME	LUM.TYPES	Z	P	N	L.T.P	E.S	E.S.P	TEL	DATA	TV
C3-3B01	Hall	ATY2-4x18W	4	18	20	1440	4	1200	3	2	
C3-3B01	Hall	Ö-2x18W	2	18	26	936					
C3-3B01	Stair Exit	Ö-1x28W	1	28	1	28					
C3-3B02	Registry of Birth	Ö-4X14W	4	14	15	840	20	6000	18	18	
C3-3B03	Sale Room	Ö-4X14W	4	14	6	336	2	600			
C3-3B04	Sale Room	Ö-4X14W	4	14	6	336	2	600			
C3-3B05	Sale Room	Ö-4X14W	4	14	6	336	2	600			
C3-3B06	Prisoner Stair Hall	Ö-1x28W	1	28	1	28					
C3 BLOCK	ROOM NAME	LUM.TYPES	Z	P	N	L.T.P	E.S	E.S.P	TEL	DATA	TV
C3-3B07	Electric Room	P1-2x36W	2	36	1	72	1	300			

C3 BLOCK	ROOM NAME	LUM.TYPES	Z	P	N	L.T.P	E.S	E.S.P	TEL	DATA	TV
C3-3B08	Employee Room	Ö-1x36W	1	36	1	36	2	600			
C3-3B09	Prisoner Stair Hall	Ö-1x28W	1	28	1	28					
C3-3B10	Central	Ö-4X14W	4	14	2	112	1	300			
C3-3B11	Corridor	ATY2-4x18W	4	18	6	432	2	600			
C3-3B11	Corridor	Ö-1x36W	1	36	49	1764					
C3-3B11	Corridor	Ö-2x18W	2	18	43	1548					
C3-3B11	Stair Hall	Ö-1x28W	1	28	1	28					
C3-3B12	Meeting Room	Ö-4X14W	4	14	6	336	4	1200	3	3	
C3-3B13	Judge Interrogation Room	Ö-4X14W	4	14	3	168	3	900	2	2	
C3-3B14	Judge on Duty	Ö-4X14W	4	14	3	168	3	900	1	1	1
C3-3B15	Judge Interrogation Room	Ö-4X14W	4	14	3	168	3	900	2	2	
C3-3B16	Judge on Duty	Ö-4X14W	4	14	3	168	3	900	1	1	1
C3-3B17	Judge on Duty	Ö-4X14W	4	14	3	168	3	900	1	1	1
C3-3B18	Judge Interrogation Room	Ö-4X14W	4	14	4	224	3	900	2	2	
C3-3B19	Fire Escape	Ö-1X28W	1	28	3	84					
C3-3B20	Store Room	P1-1x36W	1	36	1	36					
C3-3B21	Tea Office	Ö-1x36W	1	36	1	36	3	900			
C3-3B22	Women WC	Ö-1x36W	1	36	2	72	2	2300			
C3-3B23	Man WC	Ö-1x36W	1	36	2	72	2	2300			
C3-3B24	Judge on Duty Clerical Office	Ö-4X14W	4	14	6	336	7	2100	6	6	
C3-3B25	Judge on Duty Clerical Office	Ö-4X14W	4	14	8	448	9	2700	8	8	
C3-3B26	Judge on Duty Clerical Office	Ö-4X14W	4	14	3	168	3	900	1	1	1
C3-3B27	Attorney Generalship Clerical Office	Ö-4X14W	4	14	6	336	6	1800	5	5	
C3-3B28	Attorney General on Duty Room	Ö-4X14W	4	14	3	168	3	900	1	1	1
C3-3B29	Attorney General on Duty Room	Ö-4X14W	4	14	3	168	3	900	1	1	1
C3-3B30	Attorney General on Duty Room	Ö-4X14W	4	14	3	168	3	900	1	1	1
C3-3B31	Attorney General on Duty Room	Ö-4X14W	4	14	3	168	3	900	1	1	1
C3-3B32	Attorney General on Duty Room	Ö-4X14W	4	14	3	168	3	900	1	1	1

C3 BLOCK	ROOM NAME	LUM.TYPES	Z	P	N	L.T.P	E.S	E.S.P	TEL	DATA	TV
C3-3B33	Attorney General on Duty Room	Ö-4X14W	4	14	3	168	3	900	1	1	1
C3-3B34	Judicial Doctor and Inspection	Ö-4X14W	4	14	3	168	3	900	1	1	1
C3-3B35	Judicial Doctor and Inspection	Ö-4X14W	4	14	3	168	3	900	1	1	1
C3 BLOCK	ROOM NAME	LUM.TYPES	Z	P	N	L.T.P	E.S	E.S.P	TEL	DATA	TV
C3-3B36	Judicial Doctor and Inspection	Ö-4X14W	4	14	3	168	3	900	1	1	1
C3-3B37	Judicial Doctor and Inspection	Ö-4X14W	4	14	3	168	3	900	1	1	1
C3-3B38	Judicial Doctor and Inspection	Ö-4X14W	4	14	3	168	3	900	1	1	1
C3-3B39	Store Room	P1-2x36W	2	36	2	144	1	300			
C3-3B40	Man WC	Ö-1x36W	1	36	3	108	1	2300			
C3-3B41	Women WC	Ö-1x36W	1	36	3	108	1	2300			
C3-3B42	Store Room	P1-2x36W	2	36	2	144	1	300			
C3-3B43	Prisoner Stair Hall	Ö-1x28W	1	28	1	28					
C3-3B44	Photocopy Room	Ö-1x36W	1	36	1	36	2	600			
C3-3B45	Electric Room	P1-2x36W	2	36	1	72	1	300			
C3-3B46	Prisoner Stair Hall	Ö-1x28W	1	28	1	28					
C3-3B47	Store Room	P1-2x36W	2	36	2	144	1	300			
C3-3B48	Sale Room	Ö-4X14W	4	14	6	336	2	600			
C3-3B49	Sale Room	Ö-4X14W	4	14	6	336	2	600			
C3-3B50	Sale Room	Ö-4X14W	4	14	6	336	2	600			
C3-3B51	Hall	ATY2-4x18W	4	18	12	864	3	900	2	1	
C3-3B51	Hall	Ö-2x18W	2	18	36	1296					
C3-3B52	Judicial Doctor Pay-Office	Ö-4X14W	4	14	2	112	3	900	2	2	
C3-3B53	Judicial Doctor Clerical Office	Ö-4X14W	4	14	6	336	6	1800	5	5	
C3-3B54	Judicial Doctor Clerical Office	Ö-4X14W	4	14	3	168	4	1200	3	3	
C3-3B55	Hall	Ö-2x18W	2	18	2	72					
C3-3B56	Women WC	Ö-1x36W	1	36	2	72	2	2300			
C3-3B57	Man WC	Ö-1x36W	1	36	4	144	2	2300			

D1 BLOCK	ROOM NAME	LUM.TYPES	Z	P	N	L.T.P	E.S	E.S.P	TEL	DATA	TV
D1-3B01	Main Distribution Arterial	ATY2-4x18W	4	18	20	1440					
D1-3B01	Hall	Ö-2x18W	2	18	7	252					
D1-3B02	Electric Room	P1-2x36W	2	36	3	216	1	300			
D1-3B03	Fire Escape	Ö-1X28W	1	28	2	56					
D1-3B04	Hall	Ö-1X28W	1	28	1	28					
D1-3B05	Lawyer Dinning Hall	Ö-4X14W	4	14	6	336	5	3200			1
D1-3B06	Women WC	Ö-1x36W	1	36	4	144	2	2300			
D1-3B06	Women WC	T1-1x18W	1	18	4	72					
D1-3B07	WC	Ö-1x36W	1	36	1	36	2	2300			
D1-3B08	Cleaning Room	P1-1x18W	1	18	1	18		0			
D1-3B09	Man WC	Ö-1x36W	1	36	6	216	2	2300			
D1-3B09	Man WC	T1-1x18W	1	18	4	72					
D1-3B10	Hall	Ö-1X28W	1	28	1	28					
D1-3B11	Fire Escape	Ö-1X28W	1	28	2	56					
D2 BLOCK	ROOM NAME	LUM.TYPES	Z	P	N	L.T.P	E.S	E.S.P	TEL	DATA	TV
D2-3B01	Hall	Ö-2x18W	2	18	4	144					
D2-3B02	Electric Room	P1-2x36W	2	36	1	72	1	300			
D2-3B03	Airing Cental	Ö-1x58W	1	58	154	8932					
D2-3B04	Prisoner Stair Hall	Ö-1X28W	1	28	3	84					
D2-3B05	Prisoner Stair Hall	Ö-1X28W	1	28	3	84					
D2-3B06	Prisoner Stair Hall	Ö-1X28W	1	28	2	56					
D2-3B07	Fire Escape	Ö-1X28W	1	28	2	56					
D2-3B08	Fire security Hall	Ö-1X28W	1	28	3	84					
D2-3B09	Prisoner Stair Hall	Ö-1X28W	1	28	2	56					
D2-3B10	Prisoner Stair Hall	Ö-1X28W	1	28	2	56					
D2-3B11	Prisoner Stair Hall	Ö-1X28W	1	28	2	56					
D2-3B12	Prisoner Stair Hall	Ö-1X28W	1	28	2	56					

D1 BLOCK	ROOM NAME	LUM.TYPES	Z	P	N	L.T.P	E.S	E.S.P	TEL	DATA	TV
D2-3B13	Parking Hall	Ö-1x58W	1	58	66	3828					
D2-3B14	Store Room	P1-2x36W	2	36	3	216					
D2-3B15	Electric Room	P1-2x36W	2	36	1	72					
D2-3B16	Store Room	P1-2x36W	2	36	2	144					
D2-3B17	Store Room	P1-2x36W	2	36	3	216					
D3BLOCK	**ROOM NAME**	**LUM.TYPES**	**Z**	**P**	**N**	**L.T.P**	**E.S**	**E.S.P**	**TEL**	**DATA**	**TV**
D3-3B01	Floor Hall	ATY2-4x18W	4	18	30	2160	1	300	1	1	
D3-3B01	Floor Hall	Ö-2x26W	2	26	32	1664					
D3-3B02	Electric Room	P1-2x36W	2	36	1	72	1	300			
D3-3B03	Electric Room	P1-2x36W	2	36	1	72	1	300			
D3-3B04	Electric Room	P1-2x36W	2	36	1	72					
D3-3B05	Store Room	P1-2x36W	2	36	2	144					
D3-3B06	Parking Hall	Ö-1x58W	1	58	58	3364					
D3-3B07	WC	Ö-1x18W	1	18	2	36	1	300			
D3-3B08	Security Room	ATY2-4x18W	4	18	1	72	3	900	4	2	
D3-3B09	Control	ATY2-4x18W	4	18	1	72	1	300	2	1	
D3-3B10	Store Room	Ö-1x58W	1	58	3	174					
D3-3B11	Parking Hall	Ö-1x58W	1	58	61	3538					
D3-3B12	Store Room	P1-2x36W	2	36	3	216					
D3-3B13	Fire Escape	Ö-1X28W	1	28	3	84					
E5 BLOCK	**ROOM NAME**	**LUM.TYPES**	**Z**	**P**	**N**	**L.T.P**	**E.S**	**E.S.P**	**TEL**	**DATA**	**TV**
E5-3B01	Parking Hall	Ö-1x58W	1	58	80	4640					
E6 BLOCK	**ROOM NAME**	**LUM.TYPES**	**Z**	**P**	**N**	**L.T.P**	**E.S**	**E.S.P**	**TEL**	**DATA**	**TV**
E6-3B01	Parking Hall	Ö-1x58W	1	58	62	3596					
E6-3B02	Fire Escape	Ö-1X28W	1	28	2	56					

E6 BLOCK	ROOM NAME	LUM.TYPES	Z	P	N	L.T.P	E.S	E.S.P	TEL	DATA	TV
E6-3B03	Fire security Hall	Ö-1X28W	1	28	1	28					
A1 BLOCK	**ROOM NAME**	**LUM.TYPES**	**Z**	**P**	**N**	**L.T.P**	**E.S**	**E.S.P**	**TEL**	**DATA**	**TV**
A1-Z01	Main Distribution Arterial	ATY2-4x18W	4	18	48	3456					
A1-Z01	Main Distribution Arterial	Ö-1x28W	1	28	6	168					
A1-Z01	Main Distribution Arterial	Ö-1x60W	1	60	6	360					
A1-Z02	Electric Room	Ö-1x36W	1	36	1	36	1	300			
A1-Z03	Floor Hall	Ö-2x18W	2	18	18	648	2	600			
A1-Z04	people cafeteria	Ö-4X14W	4	14	53	2968	4	1200			3
A1-Z04	people cafeteria	Ö-1x60W	1	60	13	780					
A1-Z05	Fire security Hall	Ö-1x28W	1	28	1	28					
A1-Z06	Fire Escape	Ö-1X28W	1	28	2	56					
A1-Z07	service stairs	Ö-1X28W	1	28	2	56					
A1-Z08	service hall	Ö-2x18W	2	18	4	144					
A1-Z08	service hall	Ö-2x18W	2	18	18	648					
A1-Z09	office	ATY2-4x18W	4	18	3	216	3	900			
A1-Z10	hall	Ö-1x18W	1	18	4	72					
A1-Z11	Women WC	Ö-1x36W	1	36	3	108	2	2300			
A1-Z12	defective wc	Ö-1x36W	1	36	1	36					
A1-Z13	Man WC	Ö-1x36W	1	36	3	108	2	2300			
A1-Z14	Floor Hall	Ö-1x36W	1	36	32	1152	2	600			
A1-Z14	Floor Hall	Ö-2x18W	2	18	42	1512					
A1-Z14	Floor Hall	Ö-1x60W	1	60	10	600					
A1-Z14	stairs	Ö-1x28W	1	28	3	84					
A1-Z15	Man WC	Ö-1x36W	1	36	3	108	2	2300			
A1-Z16	Cleaning Room	Ö-1x36W	1	36	1	36					
A1-Z17	Women WC	Ö-1x36W	1	36	3	108	2	2300			
A1-Z18	hall	Ö-1x18W	1	18	4	72					

A1 BLOCK	ROOM NAME	LUM.TYPES	Z	P	N	L.T.P	E.S	E.S.P	TEL	DATA	TV
A1-Z19	Central	ATY2-4x18W	4	18	3	216	4	1200	1	1	
A1-Z20	pay room	Ö-4X14W	4	14	7	392	5	1500	4	4	
A1-Z21	necessities clerical office	Ö-4X14W	4	14	5	280	8	2400	6	6	
A1 BLOCK	ROOM NAME	LUM.TYPES	Z	P	N	L.T.P	E.S	E.S.P	TEL	DATA	TV
A1-Z22	Fire Escape	Ö-1X28W	1	28	2	56					
A1-Z23	Fire security Hall	Ö-1X28W	1	28	1	28					
A1-Z24	hall	Ö-1X28W	1	28	4	112					
A1-Z25	movables civil servant	Ö-4X14W	4	14	1	56	2	600	1	1	
A1-Z26	chancellery director assistant	Ö-4X14W	4	14	3	168	3	900	1	1	1
A1-Z27	director assistant	Ö-4X14W	4	14	3	168	3	900	1	1	1
A1-Z28	director assistant	Ö-4X14W	4	14	3	168	3	900	1	1	1
A1-Z29	Electric Room	P1-2x36W	2	36	1	72	1	300			
A1-Z30	Floor Hall	Ö-2x18W	2	18	30	1080	2	600			
A1-Z30	Floor Hall	P1-1x36W	1	36	26	936					
A1-Z30	Floor Hall	Ö-1x60W	1	60	2	120					
A1-Z30	stairs	Ö-1x28W	1	28	2	56					
A1-Z31	Photocopy Room	Ö-1x36W	1	36	2	72	2	600			
B1 BLOCK	**ROOM NAME**	**LUM.TYPES**	**Z**	**P**	**N**	**L.T.P**	**E.S**	**E.S.P**	**TEL**	**DATA**	**TV**
B1-Z01	Main Distribution Arterial	ATY2-4x18W	4	18	20	1440	1	300			
B1-Z01	Main Distribution Arterial	Ö-2x18W	2	18	6	216					
B1-Z02	Electric Room	P1-2x36W	2	36	3	216	1	300			
B1-Z03	Fire Escape	Ö-1X28W	1	28	2	56					
B1-Z04	Fire security Hall	Ö-1X28W	1	28	1	28					
B1-Z05	Lawyer resting Hall	Ö-4x14W	4	14	6	336	5	1500			1
B1-Z06	Women WC	Ö-1x36W	1	36	4	144	2	2300			
B1-Z06	Women WC	T1-1x18W	1	18	4	72					
B1-Z07	Defective WC	Ö-1x36W	1	36	1	36	2	2300			

B1 BLOCK	ROOM NAME	LUM.TYPES	Z	P	N	L.T.P	E.S	E.S.P	TEL	DATA	TV
B1-Z08	Cleaning Room	P1-1x18W	1	18	1	18					
B1-Z09	Man WC	Ö-1x36W	1	36	6	216	2	2300			
B1-Z09	Man WC	T1-1x18W	1	18	4	72					
B1-Z10	Fire security Hall	Ö-1X28W	1	28	1	28					
B1-Z11	Fire Escape	Ö-1X28W	1	28	2	56					
B2 BLOCK	**ROOM NAME**	**LUM.TYPES**	**Z**	**P**	**N**	**L.T.P**	**E.S**	**E.S.P**	**TEL**	**DATA**	**TV**
B2-Z01	Hall	Ö-1x36W	1	36	26	936	3	900			
B2-Z01	Hall	Ö-2x18W	2	18	8	288					
B2-Z02	Law execution sage room	Ö-4x14W	4	14	3	168	3	900	1	1	1
B2-Z03	Law execution sage clerical room	Ö-4x14W	4	14	4	224	6	1800	5	5	
B2-Z03	Director	Ö-4x14W	4	14	2	112	2	600	1	1	
B2-Z04	Director	Ö-4x14W	4	14	2	112	3	900	1	1	
B2-Z04	Law execution sage clerical room	Ö-4x14W	4	14	4	224	6	1800	5	5	
B2-Z05	Law execution sage room	Ö-4x14W	4	14	3	168	3	900	1	1	1
B2-Z06	Law execution sage room	Ö-4x14W	4	14	3	168	3	900	1	1	1
B2-Z07	Law execution sage clerical room	Ö-4x14W	4	14	4	224	6	1800	5	5	
B2-Z08	Law execution sage clerical room	Ö-4x14W	4	14	4	224	6	1800	5	5	
B2-Z09	Law execution sage room	Ö-4x14W	4	14	3	168	3	900	1	1	1
B2-Z10	Lawyer resting Hall	Ö-4x14W	4	14	7	392	5	1500			1
B2-Z10	Lawyer resting Hall	Ö-2x18W	2	18	5	180					
B2-Z11	Law execution sage hearing room	Ö-4x14W	4	14	6	336	4	1200		1	
B2-Z11	Law execution sage hearing room	Ö-2x18W	2	18	10	360					
B2-Z12	attendant Room	Ö-1x36W	1	36	3	108	1	300			
B2-Z13	Tea Office	Ö-1x36W	1	36	3	108	3	900			
B2-Z14	Law execution sage hearing room	Ö-4x14W	4	14	6	336	4	1200		1	
B2-Z15	Law execution sage hearing room	Ö-4x14W	4	14	6	336	4	1200		1	
B2-Z16	Man WC	Ö-1x36W	1	36	3	108	1	2300			

B2 BLOCK	ROOM NAME	LUM.TYPES	Z	P	N	L.T.P	E.S	E.S.P	TEL	DATA	TV
B2-Z17	Women WC	Ö-1x36W	1	36	3	108	1	2300			
B2-Z18	Law execution sage hearing room	Ö-4x14W	4	14	6	336	4	1200		1	
B2-Z19	Electric Room	P1-2x36W	2	36	3	216	1	300			
B2-Z20	hall	ATY2-4x18W	4	18	33	2376	10	3000			
B2-Z20	hall	Ö-2x18W	2	18	63	2268					
B2-Z20	stairs	Ö-1X28W	1	28	2	56					
B2-Z21	Law execution sage hearing room	Ö-4x14W	4	14	6	336	4	1200		1	
B2 BLOCK	ROOM NAME	LUM.TYPES	Z	P	N	L.T.P	E.S	E.S.P	TEL	DATA	TV
B2-Z22	Women WC	Ö-1x36W	1	36	3	108	1	2300			
B2-Z23	Man WC	Ö-1x36W	1	36	3	108	1	2300			
B2-Z24	Law execution sage hearing room	Ö-4x14W	4	14	6	336	4	1200		1	
B2-Z25	Law execution sage hearing room	Ö-4x14W	4	14	6	336	4	1200		1	
B2-Z26	Electric Room	P1-2x36W	2	36	3	216	1	300			
B2-Z27	Tea Office	Ö-1x36W	1	36	3	108	3	900			
B2-Z28	Law execution sage hearing room	Ö-4x14W	4	14	6	336	4	1200		1	
B2-Z29	Law execution sage hearing room	Ö-4x14W	4	14	6	336	4	1200		1	
B2-Z30	Man WC	Ö-1x36W	1	36	3	108	1	2300			
B2-Z31	Women WC	Ö-1x36W	1	36	3	108	1	2300			
B2-Z32	Law execution sage hearing room	Ö-4x14W	4	14	6	336	4	1200		1	
B2-Z33	Fire security Hall	Ö-1X28W	1	28	3	84					
B2-Z34	Fire Escape	Ö-1X28W	1	28	2	56					
B2-Z35	Law execution sage room	Ö-4x14W	4	14	3	168	3	900	1	1	1
B2-Z36	Law execution sage clerical room	Ö-4x14W	4	14	4	224	6	1800	5	5	
B2-Z36	Director	Ö-4x14W	4	14	2	112	2	600	1	1	
B2-Z37	Law execution sage clerical room	Ö-4x14W	4	14	4	224	6	1800	5	5	
B2-Z37	Director	Ö-4x14W	4	14	2	112	2	600	1	1	
B2-Z38	Law execution sage room	Ö-4x14W	4	14	3	168	3	900	1	1	1
B2-Z39	Law execution sage room	Ö-4x14W	4	14	3	168	3	900	1	1	1

B2 BLOCK	ROOM NAME	LUM.TYPES	Z	P	N	L.T.P	E.S	E.S.P	TEL	DATA	TV
B2-Z40	Law execution sage clerical room	Ö-4x14W	4	14	4	224	6	1800	5	5	
B2-Z40	Director	Ö-4x14W	4	14	2	112	2	600	1	1	1
B2-Z41	Law execution sage clerical room	Ö-4x14W	4	14	4	224	6	1800	5	5	
B2-Z41	Director	Ö-4x14W	4	14	2	112	2	600	1	1	1
B2-Z42	Law execution sage room	Ö-4x14W	4	14	3	168	3	900	1	1	1
B2-Z43	Law execution sage room	Ö-4x14W	4	14	3	168	3	900	1	1	1
B2-Z44	Law execution sage clerical room	Ö-4x14W	4	14	4	224	6	1800	5	5	
B2-Z44	Director	Ö-4x14W	4	14	2	112	2	600	1	1	1
B2 BLOCK	**ROOM NAME**	**LUM.TYPES**	**Z**	**P**	**N**	**L.T.P**	**E.S**	**E.S.P**	**TEL**	**DATA**	**TV**
B2-Z45	Law execution sage clerical room	Ö-4x14W	4	14	4	224	6	1800	5	5	
B2-Z45	Director	Ö-4x14W	4	14	2	112	2	600	1	1	1
B2-Z46	Law execution sage room	Ö-4x14W	4	14	3	168	3	900	2	1	1
B3 BLOCK	**ROOM NAME**	**LUM.TYPES**	**Z**	**P**	**N**	**L.T.P**	**E.S**	**E.S.P**	**TEL**	**DATA**	**TV**
B3-Z01	Floor Hall	ATY2-4x18W	4	18	20	1440	2	9300			
B3-Z01	Floor Hall	Ö-2x26W	2	26	41	2132					
B3-Z02	Electric Room	P1-1x36W	1	36	1	36	1	300			
B3-Z03	Electric Room	P1-1x36W	1	36	1	36	1	300			
B3-Z04	Floor Hall	ATY2-4x18W	4	18	6	432					
B3-Z05	Store Room	P1-1x36W	1	36	1	36					
B3-Z06	Store Room	P1-1x36W	1	36	1	36					
B3-Z07	Law execution sage room	Ö-4x14W	4	14	3	168	3	900	1	1	1
B3-Z08	Law execution sage clerical room	Ö-4x14W	4	14	4	224	6	1800	5	5	
B3-Z08	Director	Ö-4x14W	4	14	2	112	2	600	1	1	1
B3-Z09	Law execution sage clerical room	Ö-4x14W	4	14	4	224	6	1800	5	5	
B3-Z09	Director	Ö-4x14W	4	14	2	112	2	600	1	1	1
B3-Z10	Law execution sage room	Ö-4x14W	4	14	3	168	3	900	1	1	1

B3 BLOCK	ROOM NAME	LUM.TYPES	Z	P	N	L.T.P	E.S	E.S.P	TEL	DATA	TV
B3-Z11	family Law sage room	Ö-4x14W	4	14	3	168	4	1200	1	1	1
B3-Z12	family law sage clerical room	Ö-4x14W	4	14	4	224	6	1800	5	5	
B3-Z12	Director	Ö-4x14W	4	14	2	112	2	600	1	1	1
B3-Z13	family law sage clerical room	Ö-4x14W	4	14	4	224	6	1800	5	5	
B3-Z13	Director	Ö-4x14W	4	14	2	112	2	600	1	1	1
B3-Z14	family Law sage room	Ö-4x14W	4	14	3	168	3	900	1	1	1
B3-Z15	family Law sage room	Ö-4x14W	4	14	3	168	3	900	1	1	1
B3-Z16	family law sage clerical room	Ö-4x14W	4	14	4	224	6	1800	5	5	
B3-Z16	Director	Ö-4x14W	4	14	2	112	2	600	1	1	1
B3-Z17	family law sage clerical room	Ö-4x14W	4	14	4	224	6	1800	5	5	
B3 BLOCK	ROOM NAME	LUM.TYPES	Z	P	N	L.T.P	E.S	E.S.P	TEL	DATA	TV
B3-Z17	Director	Ö-4x14W	4	14	2	112	2	600	1	1	1
B3-Z18	family Law sage room	Ö-4x14W	4	14	3	168	3	900	1	1	1
B3-Z19	Store Room	P1-1x36W	1	36	1	36					
B3-Z20	Hall	Ö-1x36W	1	36	40	1440	4	1200			
B3-Z20	Hall	Ö-2x26W	2	26	22	1144					
B3-Z21	Fire Escape	Ö-1X28W	1	28	2	56					
B3-Z22	Fire security Hall	Ö-1X28W	1	28	1	28					
B3-Z23	family Law hearing room	Ö-4x14W	4	14	6	336	4	1200		1	
B3-Z24	Women WC	Ö-1x36W	1	36	3	108	1	2300			
B3-Z25	Man WC	Ö-1x36W	1	36	3	108	1	2300			
B3-Z26	family Law hearing room	Ö-4x14W	4	14	6	336	4	1200		1	
B3-Z27	family Law hearing room	Ö-4x14W	4	14	6	336	4	1200		1	
B3-Z28	Photocopy Room	Ö-1x36W	1	36	3	108	1	300			
B3-Z29	Electric Room	Ö-1x36W	1	36	2	72	1	300			
B3-Z30	family Law hearing room	Ö-4x14W	4	14	6	336	4	1200		1	
B3-Z31	Law execution sage hearing room	Ö-4x14W	4	14	6	336	4	1200		1	
B3-Z32	Man WC	Ö-1x36W	1	36	3	108	1	2300			

B3 BLOCK	ROOM NAME	LUM.TYPES	Z	P	N	L.T.P	E.S	E.S.P	TEL	DATA	TV
B3-Z33	Women WC	Ö-1x36W	1	36	3	108	1	2300			
B3-Z34	Law execution sage hearing room	Ö-4x14W	4	14	6	336	4	1200		1	
B3-Z35	Hall	ATY2-4x18W	4	18	22	1584	6	1800			
B3-Z35	Hall	Ö-2x18W	2	18	30	1080					
B3-Z36	social services	Ö-4X14W	4	14	2	112	2	600	1	1	1
B3-Z37	Pedegog	Ö-4X14W	4	14	2	112	2	600	1	1	1
B3-Z38	psycholog	Ö-4X14W	4	14	2	112	2	600	1	1	1
B3-Z39	psycholog	Ö-4X14W	4	14	2	112	2	600	1	1	1
B3-Z40	Pedegog	Ö-4X14W	4	14	2	112	2	600	1	1	1
B3-Z41	social services	Ö-4X14W	4	14	2	112	2	600	1	1	1
B3-Z42	social services	Ö-4X14W	4	14	2	112	2	600	1	1	1
B3-Z43	Pedegog	Ö-4X14W	4	14	2	112	2	600	1	1	1
B3-Z44	psycholog	Ö-4X14W	4	14	2	112	2	600	1	1	1
B3-Z45	psycholog	Ö-4X14W	4	14	2	112	2	600	1	1	1
B3-Z46	Pedegog	Ö-4X14W	4	14	2	112	2	600	1	1	1
B3-Z47	social services	Ö-4X14W	4	14	2	112	2	600	1	1	1

C1 BLOCK	ROOM NAME	LUM.TYPES	Z	P	N	L.T.P	E.S	E.S.P	TEL	DATA	TV
C1-Z01	Hall	ATY2-4x18W	4	18	52	3744	8	2400			
C1-Z01	stairs	Ö-1X28W	1	28	1	28					
C1-Z02	criminal court hearing room	Ö-4X14W	4	14	12	672	4	1200		1	
C1-Z03	criminal court hearing room	Ö-4X14W	4	14	12	672	4	1200		1	
C1-Z04	criminal court hearing room	Ö-4X14W	4	14	12	672	4	1200		1	
C1-Z05	criminal court hearing room	Ö-4X14W	4	14	12	672	4	1200		1	
C1-Z06	Man WC	Ö-1x36W	1	36	4	144	1	2300			
C1-Z07	Women WC	Ö-1x36W	1	36	2	72	1	2300			
C1-Z08	discussion	Ö-4X14W	4	14	1	56	1	300	1	1	
C1-Z09	prisoner waiting room	Ö-1X28W	1	28	1	28					

C1 BLOCK	ROOM NAME	LUM.TYPES	Z	P	N	L.T.P	E.S	E.S.P	TEL	DATA	TV
C1-Z10	Lawyer interview	Ö-4X14W	4	14	1	56					
C1-Z11	prisoner stairs hall	Ö-1X28W	1	28	1	28					
C1-Z12	Electric Room	P1-2x36W	2	36	3	216	1	300			
C1-Z13	Photocopy Room	Ö-1x36W	1	36	1	36	1	300			
C1-Z14	prisoner stairs hall	Ö-1X28W	1	28	1	28					
C1-Z15	prisoner waiting room	Ö-1X28W	1	28	1	28					
C1-Z16	Lawyer interview	Ö-4X14W	4	14	1	56					
C1-Z17	discussion	Ö-4X14W	4	14	1	56	1	300	1	1	
C1-Z18	Women WC	Ö-1x36W	1	36	2	72	1	2300			
C1-Z18	men WC	Ö-1x36W	1	36	2	72	1	2300			
C1-Z19	discussion	Ö-4X14W	4	14	1	56	1	300	1	1	
C1 BLOCK	ROOM NAME	LUM.TYPES	Z	P	N	L.T.P	E.S	E.S.P	TEL	DATA	TV
C1-Z20	prisoner waiting room	Ö-1X28W	1	28	1	28					
C1-Z21	Lawyer interview	Ö-4X14W	4	14	1	56					
C1-Z22	prisoner stairs hall	Ö-1X28W	1	28	1	28					
C1-Z23	Electric Room	P1-2x36W	2	36	3	216	1	300			
C1-Z24	attendant room	Ö-1x36W	1	36	1	36	1	300			
C1-Z25	prisoner stairs hall	Ö-1X28W	1	28	1	28					
C1-Z26	prisoner waiting room	Ö-1X28W	1	28	1	28					
C1-Z27	Lawyer interview	Ö-4X14W	4	14	1	56					
C1-Z28	discussion	Ö-4X14W	4	14	1	56	1	300	1	1	
C1-Z29	Hall	Ö-1x36W	1	36	34	1224	2	600			
C1-Z29	Hall	Ö-2x18W	2	18	19	684					
C1-Z29	Hall	ATY2-4x18W	4	18	6	432					
C1-Z30	criminal court member room	Ö-4x14W	4	14	3	168	3	900	1	1	1
C1-Z31	criminal court president	Ö-4x14W	4	14	6	336	4	1200	1	1	1
C1-Z32	criminal court clerical	Ö-4x14W	4	14	6	336	8	2400	6	6	
C1-Z33	criminal court member room	Ö-4x14W	4	14	3	168	3	900	1	1	1

C1 BLOCK	ROOM NAME	LUM.TYPES	Z	P	N	L.T.P	E.S	E.S.P	TEL	DATA	TV
C1-Z34	depot	P1-1x36W	1	36	1	36					
C1-Z35	Fire Escape	Ö-1X28W	1	28	2	56					
C1-Z36	Fire security Hall	Ö-1X28W	1	28	1	28					
C1-Z37	depot	P1-1x36W	1	36	1	36					
C1-Z38	tea office	P1-1x36W	1	36	1	36	3	900			
C1-Z39	Women WC	Ö-1x36W	1	36	2	72	1	2300			
C1-Z40	men WC	Ö-1x36W	1	36	2	72	1	2300			
C1-Z41	criminal court president	Ö-4x14W	4	14	6	336	4	1200	1	1	1
C1-Z42	criminal court clerical	Ö-4x14W	4	14	6	336	8	2400	6	6	
C1-Z43	criminal court member room	Ö-4x14W	4	14	3	168	3	900	1	1	1
C1-Z44	criminal court member room	Ö-4x14W	4	14	3	168	3	900	1	1	1
C1-Z45	criminal court member room	Ö-4x14W	4	14	3	168	3	900	1	1	1
C1-Z46	criminal court member room	Ö-4x14W	4	14	3	168	3	900	1	1	1
C1-Z47	criminal court president	Ö-4x14W	4	14	6	336	4	1200	1	1	1
C1-Z48	criminal court clerical	Ö-4x14W	4	14	6	336	8	2400	6	6	
C1-Z49	criminal court clerical	Ö-4x14W	4	14	6	336	9	2700	6	6	
C1-Z50	criminal court president	Ö-4x14W	4	14	6	336	4	1200	1	1	1
C1-Z51	criminal court member room	Ö-4x14W	4	14	3	168	3	900	1	1	1
C1-Z52	criminal court member room	Ö-4x14W	4	14	3	168	3	900	1	1	1
C3 BLOCK	ROOM NAME	LUM.TYPES	Z	P	N	L.T.P	E.S	E.S.P	TEL	DATA	TV
C3-Z01	Hall	ATY2-4x18W	4	18	52	3744	8	2400			
C3-Z02	criminal court hearing room	Ö-4X14W	4	14	12	672	4	1200		1	
C3-Z03	criminal court hearing room	Ö-4X14W	4	14	12	672	5	1500		2	
C3-Z04	criminal court hearing room	Ö-4X14W	4	14	12	672	6	1800		3	
C3-Z05	criminal court hearing room	Ö-4X14W	4	14	12	672	7	2100		4	
C3-Z06	Women WC	Ö-1x36W	1	36	2	72	1	2300			
C3-Z07	men WC	Ö-1x36W	1	36	4	144	1	2300			

C3 BLOCK	ROOM NAME	LUM.TYPES	Z	P	N	L.T.P	E.S	E.S.P	TEL	DATA	TV
C3-Z08	discussion	Ö-4X14W	4	14	1	56	1	300	1	1	
C3-Z09	prisoner waiting room	Ö-1X28W	1	28	1	28		0			
C3-Z10	Lawyer interview	Ö-4X14W	4	14	1	56	1	300			
C3-Z11	prisoner stairs hall	Ö-1X28W	1	28	1	28					
C3-Z12	Electric Room	P1-2x36W	2	36	3	216	1	300			
C3-Z13	Photocopy Room	Ö-1x36W	1	36	1	36	1	300			
C3-Z14	prisoner stairs hall	Ö-1X28W	1	28	1	28					
C3-Z15	prisoner waiting room	Ö-1X28W	1	28	1	28					
C3-Z16	Lawyer interview	Ö-4X14W	4	14	1	56					
C3-Z17	discussion	Ö-4X14W	4	14	1	56	1	300	1	1	
C3-Z18	Women WC	Ö-1x36W	1	36	2	72	1	2300			
C3-Z18	men WC	Ö-1x36W	1	36	4	144	1	2300			
C3-Z19	discussion	Ö-4X14W	4	14	1	56	1	300	1	1	
C3-Z20	prisoner waiting room	Ö-1X28W	1	28	1	28		0			
C3-Z21	Lawyer interview	Ö-4X14W	4	14	1	56	1	300			
C3-Z22	prisoner stairs hall	Ö-1X28W	1	28	1	28					
C3-Z23	Electric Room	P1-2x36W	2	36	3	216	1	300			
C3-Z24	attendant Room	Ö-1x36W	1	36	1	36	1	300			
C3-Z25	prisoner stairs hall	Ö-1X28W	1	28	1	28					
C3-Z26	prisoner waiting room	Ö-1X28W	1	28	1	28					
C3-Z27	Lawyer interview	Ö-4X14W	4	14	1	56					
C3-Z28	discussion	Ö-4X14W	4	14	1	56	1	300	1	1	
C3-Z29	Hall	Ö-1x36W	1	36	53	1908	2	600			
C3-Z29	Hall	ATY2-4x18W	4	18	6	432					
C3-Z29	Hall	Ö-2x18W	2	18	19	684					
C3-Z30	criminal court member room	Ö-4x14W	4	14	3	168	3	900	1	1	1
C3-Z31	criminal court president	Ö-4x14W	4	14	6	336	4	1200	1	1	1
C3-Z32	criminal court clerical	Ö-4x14W	4	14	6	336	8	2400	6	6	

C3 BLOCK	ROOM NAME	LUM.TYPES	Z	P	N	L.T.P	E.S	E.S.P	TEL	DATA	TV
C3-Z33	criminal court member room	Ö-4x14W	4	14	3	168	3	900	1	1	1
C3-Z34	depot	P1-1x36W	1	36	1	36					
C3-Z35	Fire Escape	Ö-1X28W	1	28	2	56					
C3-Z36	Fire security Hall	Ö-1X28W	1	28	1	28					
C3-Z37	depot	P1-1x36W	1	36	1	36					
C3-Z38	tea office	P1-1x36W	1	36	1	36	3	900			
C3-Z39	Women WC	Ö-1x36W	1	36	2	72	1	2300			
C3-Z40	men WC	Ö-1x36W	1	36	4	144	1	2300			
C3-Z41	criminal court president	Ö-4x14W	4	14	6	336	4	1200	1	1	1
C3-Z42	criminal court clerical	Ö-4x14W	4	14	8	448	9	2700	7	7	
C3-Z43	criminal court member room	Ö-4x14W	4	14	3	168	3	900	1	1	1
C3-Z44	criminal court member room	Ö-4x14W	4	14	3	168	3	900	1	1	1
C3-Z45	criminal court member room	Ö-4x14W	4	14	3	168	3	900	1	1	1
C3-Z46	criminal court member room	Ö-4x14W	4	14	3	168	3	900	1	1	1
C3-Z47	criminal court president	Ö-4x14W	4	14	6	336	4	1200	1	1	1
C3-Z48	criminal court clerical	Ö-4x14W	4	14	6	336	8	2400	6	6	
C3-Z49	criminal court clerical	Ö-4x14W	4	14	6	336	8	2400	6	6	
C3-Z50	criminal court president	Ö-4x14W	4	14	6	336	4	1200	1	1	1
C3-Z51	criminal court member room	Ö-4x14W	4	14	3	168	3	900	1	1	1
C3-Z52	criminal court member room	Ö-4x14W	4	14	3	168	3	900	1	1	1
C3-Z53	Hall	Ö-1x36W	1	36	2	72					
D1 BLOCK	ROOM NAME	LUM.TYPES	Z	P	N	L.T.P	E.S	E.S.P	TEL	DATA	TV
D1-Z01	Main distribution artery	ATY2-4x18W	4	18	20	1440	1	300			
D1-Z02	Electric Room	P1-2x36W	2	36	3	216	1	300			
D1-Z03	Fire Escape	Ö-1X28W	1	28	2	56					
D1-Z04	Fire security Hall	Ö-1X28W	1	28	1	28					
D1-Z05	Lawyer resting	Ö-4x14W	4	14	6	336	5	1500			1

D1 BLOCK	ROOM NAME	LUM.TYPES	Z	P	N	L.T.P	E.S	E.S.P	TEL	DATA	TV
D1-Z06	Women WC	T1-1x18W	1	18	4	72					
D1-Z06	Women WC	Ö-1x36W	1	36	2	72	2	2300			
D1-Z07	Defective WC	Ö-1x36W	1	36	1	36	2	2300			
D1-Z08	Cleaning Room	P1-1x18W	1	18	1	18					
D1-Z09	Man WC	Ö-1x36W	1	36	6	216	2	2300			
D1-Z09	Man WC	T1-1x18W	1	18	4	72					
D1-Z10	Fire security Hall	Ö-1X28W	1	28	1	28					
D1-Z11	Fire Escape	Ö-1X28W	1	28	2	56					
D2 BLOCK	**ROOM NAME**	**LUM.TYPES**	**Z**	**P**	**N**	**L.T.P**	**E.S**	**E.S.P**	**TEL**	**DATA**	**TV**
D2-Z01	Hall	Ö-1x36W	1	36	32	1152	2	600			
D2-Z01	Hall	Ö-2x26W	2	26	10	520					
D2 BLOCK	ROOM NAME	LUM.TYPES	Z	P	N	L.T.P	E.S	E.S.P	TEL	DATA	TV
D2-Z02	Lawyer interview	Ö-4X14W	4	14	3	168	2	600	1	1	
D2-Z03	court punisment instance sage room	Ö-4X14W	4	14	3	168	3	900	1	1	1
D2-Z04	court punisment instance clerical	Ö-4X14W	4	14	6	336	8	2400	6	6	
D2-Z04	Director	Ö-4x14W	4	14	2	112	2	600	1	1	1
D2-Z05	court punisment instance clerical	Ö-4X14W	4	14	6	336	8	2400	6	6	
D2-Z05	Director	Ö-4x14W	4	14	2	112	2	600	1	1	1
D2-Z06	court punisment instance sage room	Ö-4X14W	4	14	3	168	3	900	1	1	1
D2-Z07	Lawyer interview	Ö-4X14W	4	14	3	168	2	600	1	1	
D2-Z08	court punisment instance sage room	Ö-4X14W	4	14	3	168	3	900	1	1	1
D2-Z09	court punisment instance clerical	Ö-4X14W	4	14	6	336	8	2400	6	6	
D2-Z09	Director	Ö-4x14W	4	14	2	112	2	600	1	1	1
D2-Z10	court punisment instance clerical	Ö-4X14W	4	14	6	336	8	2400	6	6	
D2-Z10	Director	Ö-4x14W	4	14	2	112	2	600	1	1	1
D2-Z11	court punisment instance sage room	Ö-4X14W	4	14	3	168	3	900	1	1	1
D2-Z12	Lawyer interview	Ö-4X14W	4	14	3	168	2	600	1	1	

D2 BLOCK	ROOM NAME	LUM.TYPES	Z	P	N	L.T.P	E.S	E.S.P	TEL	DATA	TV
D2-Z13	Lawyer resting	Ö-4x14W	4	14	3	168	2	600			1
D2-Z14	prisoner stairs hall	Ö-1X28W	1	28	2	56					
D2-Z15	court punisment instance hearing room	Ö-4x14W	4	14	6	336	4	1200		1	
D2-Z16	attendant Room	Ö-1x36W	1	36	3	108	1	300			
D2-Z17	tea office	Ö-1x36W	1	36	3	108	3	900			
D2-Z18	court punisment instance hearing room	Ö-4x14W	4	14	6	336	4	1200		1	
D2-Z19	prisoner stairs hall	Ö-1X28W	1	28	2	56					
D2-Z20	court punisment instance hearing room	Ö-4x14W	4	14	6	336	4	1200		1	
D2-Z21	men WC	Ö-1x36W	1	36	3	108	1	2300			
D2-Z22	Women WC	Ö-1x36W	1	36	3	108	1	2300			
D2-Z23	court punisment instance hearing room	Ö-4x14W	4	14	6	336	4	1200		1	
D2-Z24	prisoner stairs hall	Ö-1X28W	1	28	2	56					
D2-Z25	Electric Room	P1-2x36W	2	36	1	72					
D2-Z26	Hall	ATY2-4x18W	4	18	37	2664	10	3000			
D2-Z26	Hall	Ö-2X28W	2	28	60	3360					
D2-Z27	prisoner stairs hall	Ö-1X28W	1	28	2	56					
D2-Z28	court punisment instance hearing room	Ö-4x14W	4	14	6	336	4	1200		1	
D2-Z29	Women WC	Ö-1x36W	1	36	3	108	1	2300			
D2-Z30	men WC	Ö-1x36W	1	36	3	108	1	2300			
D2-Z31	court punisment instance hearing room	Ö-4x14W	4	14	6	336	4	1200		1	
D2-Z32	prisoner stairs hall	Ö-1X28W	1	28	2	56					
D2-Z33	court punisment instance hearing room	Ö-4x14W	4	14	6	336	4	1200		1	
D2-Z34	Electric Room	P1-2x36W	2	36	3	216	1	300			
D2-Z35	tea office	Ö-1x36W	1	36	3	108	3	900			
D2-Z36	court punisment instance hearing room	Ö-4x14W	4	14	6	336	4	1200		1	
D2-Z37	prisoner stairs hall	Ö-1X28W	1	28	2	56					
D2-Z38	court punisment instance hearing room	Ö-4x14W	4	14	6	336	4	1200		1	
D2-Z39	men WC	Ö-1x36W	1	36	3	108	1	2300			

D2 BLOCK	ROOM NAME	LUM.TYPES	Z	P	N	L.T.P	E.S	E.S.P	TEL	DATA	TV
D2-Z40	Women WC	Ö-1x36W	1	36	3	108	1	2300			
D2-Z41	court punisment instance hearing room	Ö-4x14W	4	14	6	336	4	1200		1	
D2-Z42	prisoner stairs hall	Ö-1X28W	1	28	2	56					
D2-Z43	Fire security Hall	Ö-1X28W	1	28	3	84					
D2-Z44	Fire Escape	Ö-1X28W	1	28	2	56					
D2-Z45	Lawyer interview	Ö-4X14W	4	14	3	168	2	600	1	1	
D2-Z46	court punisment instance sage room	Ö-4X14W	4	14	3	168	3	900	1	1	1
D2-Z47	court punisment instance clerical	Ö-4X14W	4	14	6	336	8	2400	6	6	
D2-Z48	court punisment instance clerical	Ö-4X14W	4	14	6	336	8	2400	6	6	
D2-Z49	court punisment instance sage room	Ö-4X14W	4	14	3	168	3	900	1	1	1
D2-Z50	Lawyer interview	Ö-4X14W	4	14	3	168	2	600	1	1	
D2-Z51	court punisment instance sage room	Ö-4X14W	4	14	3	168	3	900	1	1	1
D2-Z52	court punisment instance clerical	Ö-4X14W	4	14	6	336	8	2400	6	6	
D2-Z53	court punisment instance clerical	Ö-4X14W	4	14	6	336	8	2400	6	6	
D2-Z54	court punisment instance sage room	Ö-4X14W	4	14	3	168	3	900	1	1	1
D2-Z55	Lawyer interview	Ö-4X14W	4	14	3	168	2	600	1	1	
D2-Z56	court punisment instance sage room	Ö-4X14W	4	14	3	168	3	900	1	1	1
D2-Z57	court punisment instance clerical	Ö-4X14W	4	14	6	336	8	2400	6	6	
D2-Z58	court punisment instance clerical	Ö-4X14W	4	14	6	336	8	2400	6	6	
D2-Z59	court punisment instance sage room	Ö-4X14W	4	14	3	168	3	900	1	1	1
D2-Z60	Lawyer interview	Ö-4X14W	4	14	3	168	2	600	1	1	
D2-Z61	Hall	Ö-1x36W	1	36	46	1656	4	1200			
D2-Z61	Hall	Ö-2X26W	2	26	12	624					
D3 BLOCK	**ROOM NAME**	**LUM.TYPES**	**Z**	**P**	**N**	**L.T.P**	**E.S**	**E.S.P**	**TEL**	**DATA**	**TV**
D3-Z01	Floor hall	Ö-2X26W	2	26	41	2132	1	300			
D3-Z01	Floor hall	ATY2-4x18W	4	18	20	1440					
D3-Z02	Electric Room	P1-2x36W	2	36	1	72	1	300			

D3 BLOCK	ROOM NAME	LUM.TYPES	Z	P	N	L.T.P	E.S	E.S.P	TEL	DATA	TV
D3-Z03	Electric Room	P1-2x36W	2	36	1	72	1	300			
D3-Z04	Floor hall	ATY2-4x18W	4	18	6	432					
D3-Z05	depot	P1-1x36W	1	36	1	36		0			
D3-Z06	depot	P1-1x36W	1	36	1	36		0			
D3-Z07	consumer protection sage room	Ö-4X14W	4	14	3	168	3	900	1	1	1
D3-Z08	consumer protection pen	Ö-4X14W	4	14	6	336	8	2400	6	6	
D3-Z09	consumer protection pen	Ö-4X14W	4	14	6	336	8	2400	6	6	
D3-Z10	consumer protection sage room	Ö-4X14W	4	14	3	168	3	900	1	1	1
D3-Z11	family Law sage room	Ö-4x14W	4	14	3	168	3	900	1	1	1
D3-Z12	Law execution sage clerical room	Ö-4x14W	4	14	6	336	8	2400	6	6	
D3-Z13	Law execution sage clerical room	Ö-4x14W	4	14	6	336	8	2400	6	6	
D3-Z14	consumer protection sage room	Ö-4X14W	4	14	3	168	3	900	1	1	1
D3-Z15	consumer protection sage room	Ö-4X14W	4	14	3	168	3	900	1	1	1
D3-Z16	Law execution sage clerical room	Ö-4x14W	4	14	6	336	8	2400	6	6	
D3-Z17	Law execution sage clerical room	Ö-4x14W	4	14	6	336	8	2400	6	6	
D3-Z18	consumer protection sage room	Ö-4X14W	4	14	3	168	3	900	1	1	1
D3-Z19	depot	P1-1x36W	1	36	1	36					
D3-Z20	hall	Ö-1x36W	1	36	37	1332	4	1200			
D3-Z20	hall	Ö-2X26W	2	26	12	624					
D3-Z21	Fire security Hall	Ö-1X28W	1	28	1	28					
D3-Z22	Fire Escape	Ö-1X28W	1	28	2	56					
D3-Z23	family Law hearing room	Ö-4x14W	4	14	6	336	4	1200		1	
D3-Z24	men WC	Ö-1x36W	1	36	3	108	1	2300			
D3-Z25	Women WC	Ö-1x36W	1	36	3	108	1	2300			
D3-Z26	family Law hearing room	Ö-4x14W	4	14	6	336	4	1200		1	
D3-Z27	family Law hearing room	Ö-4x14W	4	14	6	336	4	1200		1	
D3-Z28	Photocopy Room	Ö-1x36W	1	36	3	108	2	600			
D3-Z29	Electric Room	P1-2x36W	2	36	3	216	1	300			

D3 BLOCK	ROOM NAME	LUM.TYPES	Z	P	N	L.T.P	E.S	E.S.P	TEL	DATA	TV
D3-Z30	family Law hearing room	Ö-4x14W	4	14	6	336	4	1200		1	
D3-Z31	consumer protection hearing room	Ö-4x14W	4	14	6	336	4	1200		1	
D3-Z32	men WC	Ö-1x36W	1	36	3	108	1	2300			
D3-Z33	Women WC	Ö-1x36W	1	36	3	108	1	2300			
D3-Z34	consumer protection hearing room	Ö-4x14W	4	14	6	336	4	1200		1	
D3-Z35	hall	ATY2-4x18W	4	18	22	1584	6	1800			
D3-Z35	hall	Ö-2x18W	2	18	30	1080					
D3-Z36	social services	Ö-4X14W	4	14	2	112	2	600	1	1	1
D3-Z37	Pedegog	Ö-4X14W	4	14	2	112	2	600	1	1	1
D3-Z38	psycholog	Ö-4X14W	4	14	2	112	2	600	1	1	1
D3-Z39	psycholog	Ö-4X14W	4	14	2	112	2	600	1	1	1
D3-Z40	Pedegog	Ö-4X14W	4	14	2	112	2	600	1	1	1
D3-Z41	social services	Ö-4X14W	4	14	2	112	2	600	1	1	1
D3-Z42	social services	Ö-4X14W	4	14	2	112	2	600	1	1	1
D3-Z43	Pedegog	Ö-4X14W	4	14	2	112	2	600	1	1	1
D3-Z44	psycholog	Ö-4X14W	4	14	2	112	2	600	1	1	1
D3-Z45	psycholog	Ö-4X14W	4	14	2	112	2	600	1	1	1
D3-Z46	Pedegog	Ö-4X14W	4	14	2	112	2	600	1	1	1
D3-Z47	social services	Ö-4X14W	4	14	2	112	2	600	1	1	1
BLOCK	**ROOM NAME**	**LUM.TYPE**	**Z**	**P**	**N**	**L.T.P**	**E.S.**	**E.S.P**	**TEL**	**DATA**	**TV**
A1 - 301	Main Distribution Artery	ATY2-4x18W	4	18	48	3456	0	0	0	0	0
A1 - 302	Electricity Room	P1-2x36W	2	36	1	72	1	300	0	0	0
A1 - 303	Floor Hall	Ö-2x26W	2	26	35	1820	2	600	0	0	0
A1 - 303	Floor Hall	Ö-1x36W	1	36	26	936		0			
A1 - 304	Rep.Attorney Gen. Room	Ö-4x14W	4	14	3	168	3	900	2	1	1
A1 - 305	Rep.Attorney Gen. Room	Ö-4x14W	4	14	3	168	3	900	2	1	1
A1 - 306	Rep.Attorney Gen. Room	Ö-4x14W	4	14	3	168	3	900	2	1	1

BLOCK	ROOM NAME	LUM.TYPE	Z	P	N	L.T.P	E.S.	E.S.P	TEL	DATA	TV
A1 - 307	Rep.Attorney Gen. Room	Ö-4x14W	4	14	3	168	3	900	2	1	1
A1 - 308	Rep.Attorney Gen. Room	Ö-4x14W	4	14	3	168	3	900	2	1	1
A1 - 309	Fire Sec. Hall	Ö-1x28W	1	28	1	28	0	0	0	0	0
A1 - 310	Fire Stairs	Ö-1x28W	1	28	2	56	0	0	0	0	0
A1 - 311	Rep.Attorney Gen. Room	Ö-4x14W	4	14	3	168	3	900	2	1	1
A1 - 312	Rep.Attorney Gen. Room	Ö-4x14W	4	14	3	168	3	900	2	1	1
A1 - 313	Rep.H.Attorney Gen. Agent	Ö-4x14W	4	14	6	336	4	1200	2	1	1
A1 - 314	Secretary	Ö-4x14W	4	14	3	168	2	600	2	1	1
A1 - 315	Rep.H.Attorney Gen. Agent	Ö-4x14W	4	14	6	336	4	1200	2	1	1
A1 - 316	Auxiliary Room	Ö-4x14W	4	14	3	168	3	900	1	1	1
A1 - 317	Service Stairs	Ö-1x28W	1	28	2	56	0	0	0	0	0
A1 - 318	Service hall	Ö-2x18W	2	18	4	144	0	0	0	0	0
A1 - 319	Hall	Ö-1x18W	1	18	4	72	0	0	0	0	0
A1 - 320	Women WC	Ö-1x36W	1	36	3	108	1	2300	0	0	0
A1 - 320	Women WC	T-1x18W	1	18	4	72		0			
A1 - 321	Defective WC	Ö-1x36W	1	36	1	36	0	0	0	0	0
A1 - 322	Men WC	Ö-1x36W	1	36	3	108	1	2300	0	0	0
A1 - 322	Men WC	T-1x18W	1	18	3	54		0			
A1 - 323	Photocopy Room	P1-2x36W	2	36	4	288	3	900	0	0	0
A1 - 324	Rep.H.Attorn.Gen. Agent Asoc.	Ö-4x14W	4	14	7	392	10	3000	10	10	0
A1 - 324	Manager Room	Ö-4x14W	4	14	1	56	1	300	1	1	0
A1 - 325	Floor Hall	Ö-2x26W	2	26	28	1456	0	0	0	0	0
A1 - 325	Floor Hall	Ö-1x36W	1	36	32	1152		0			
BLOCK	ROOM NAME	LUM.TYPE	Z	P	N	L.T.P	E.S.	E.S.P	TEL	DATA	TV
A1 - 325	Floor Hall	Ö-1x28W	1	28	3	84		0			
A1 - 326	Floor Hall	Ö-2x26W	2	26	81	4212		0			
A1 - 327	Rep.H.Attorney Gen. Agent	Ö-4x14W	4	14	6	336	4	1200	2	1	1

BLOCK	ROOM NAME	LUM.TYPE	Z	P	N	L.T.P	E.S.	E.S.P	TEL	DATA	TV
A1 - 328	Secretary	Ö-4x14W	4	14	3	168	2	600	2	1	1
A1 - 329	Rep.H.Attorney Gen. Agent	Ö-4x14W	4	14	6	336	4	1200	2	1	1
A1 - 330	Secretary	Ö-4x14W	4	14	3	168	2	600	2	1	1
A1 - 331	Rep.H.Attorney Gen. Agent	Ö-4x14W	4	14	6	336	4	1200	2	1	1
A1 - 332	Hall	Ö-1x18W	1	18	4	72	0	0			
A1 - 333	Men WC	Ö-1x36W	1	36	3	108	1	2300	0	0	0
A1 - 333	Men WC	T-1x18W	1	18	3	54		0			
A1 - 334	Cleaning room	Ö-1x36W	1	36	1	36	0	0	0	0	0
A1 - 335	Women WC	Ö-1x36W	1	36	3	108	1	2300	0	0	0
A1 - 335	Women WC	T-1x18W	1	18	4	72		0			
A1 - 336	General Treasure Agent	Ö-4x14W	4	14	7	392	11	3300	11	11	0
A1 - 336	Manager Room	Ö-4x14W	4	14	1	56	1	300	1	1	0
A1 - 337	Rep.H.Attorney Gen. Agent	Ö-4x14W	4	14	6	336	4	1200	2	1	1
A1 - 338	Secretary	Ö-4x14W	4	14	3	168	2	600	2	1	1
A1 - 339	Rep.H.Attorney Gen. Agent	Ö-4x14W	4	14	6	336	4	1200	2	1	1
A1 - 340	Rep.Attorney Gen.	Ö-4x14W	4	14	3	168	3	900	2	1	1
A1 - 341	Rep.Attorney Gen.	Ö-4x14W	4	14	3	168	3	900	2	1	1
A1 - 342	Fire Stairs	Ö-1x28W	1	28	2	56	0	0	0	0	0
A1 - 343	Fire Safety Hall	Ö-1x28W	1	28	1	28	0	0	0	0	0
A1 - 344	Rep.Attorney Gen.	Ö-4x14W	4	28	3	336	3	900	2	1	1
A1 - 345	Rep.Attorney Gen.	Ö-4x14W	4	28	3	336	3	900	2	1	1
A1 - 346	Rep.Attorney Gen.	Ö-4x14W	4	28	3	336	3	900	2	1	1
A1 - 347	Rep.Attorney Gen.	Ö-4x14W	4	28	3	336	3	900	2	1	1
A1 - 348	Rep.Attorney Gen.	Ö-4x14W	4	28	3	336	3	900	2	1	1
A1 - 349	Electricity Room	P1-2x36W	2	36	1	72	1	300	0	0	0
A1 - 350	Floor Hall	Ö-2x26W	2	26	35	1820	2	600	0	0	0
A1 - 350	Floor Hall	Ö-1x36W	1	36	26	936		0			

BLOCK	ROOM NAME	LUM.TYPE	Z	P	N	L.T.P	E.S.	E.S.P	TEL	DATA	TV
A1 - 351	Photocopy Room	P1-2x36W	2	36	3	216	3	900	0	0	0
A1 - 352	Rep.H.Attorn.Gen. Agent Asoc.	Ö-4x14W	4	14	7	392	8	2400	8	8	0
A1 - 352	Manager Room	Ö-4x14W	4	14	1	56	1	300	1	1	0
BLOCK	**Room**	**LUM.TYPE**	**Z**	**P**	**N**	**L.T.P**	**E.S.**	**E.S.P**	**TEL**	**DATA**	**TV**
B1 - 301	Main Distribution Artery	ATY2-4x18W	4	18	20	1440	2	600	0	0	0
B1 - 302	Electricity Room	P1-2x36W	2	36	3	216	1	300	0	0	0
B1 - 303	Fire Stairs	Ö-1x28W	1	28	2	56	0	0	0	0	0
B1 - 304	Fire Safety Hall	Ö-1x28W	1	28	1	28	0	0	0	0	0
B1 - 305	Lawyer Resting Lounge	Ö-4x14W	4	14	6	336	5	1500	0	0	1
B1 - 306	Women WC	Ö-1x36W	1	36	4	144	1	2300	0	0	0
B1 - 306	Women WC	T-1x18W	1	18	4	72		0			
B1 - 307	Defective WC	Ö-1x36W	1	36	1	36	1	2300	0	0	0
B1 - 307	Defective WC	T-1x18W	1	18	1	18		0			
B1 - 308	Cleaning Room	P1-1x18W	1	18	1	18	0	0	0	0	0
B1 - 309	Men WC	Ö-1x36W	1	36	6	216	1	2300	0	0	0
B1 - 309	Men WC	P1-1x18W	1	18	4	72		0			
B1 - 310	Fire Safety Hall	Ö-1x28W	1	28	1	28	0	0	0	0	0
B1 - 311	Fire Stairs	Ö-1x28W	1	28	2	56	0	0	0	0	0
BLOCK	**ROOM NAME**	**LUM.TYPE**	**Z**	**P**	**N**	**L.T.P**	**E.S.**	**E.S.P**	**TEL**	**DATA**	**TV**
B2 - 301	Corridor	Ö 1x36W	1	36	32	1152	3	900	0	0	0
B2 - 301	Corridor	Ö-2x26W	2	26	10	520		0			
B2 - 302	Pea.Law Court Judge Room	Ö-4x14W	4	14	3	168	3	900	2	1	1
B2 - 303	Pea.Law Court Agent	Ö-4x14W	4	14	4	224	6	1800	5	5	0
B2 - 303	Manager Room	Ö-4x14W	4	14	2	112	2	600	1	1	0
B2 - 304	Pea.Law Court Agent	Ö-4x14W	4	14	4	224	6	1800	5	5	0
B2 - 304	Manager Room	Ö-4x14W	4	14	2	112	2	600	1	1	0

BLOCK	ROOM NAME	LUM.TYPE	Z	P	N	L.T.P	E.S.	E.S.P	TEL	DATA	TV
B2 - 305	Pea.Law Court Judge Room	Ö-4x14W	4	14	3	168	3	900	2	1	1
B2 - 306	Pea.Law Court Judge Room	Ö-4x14W	4	14	3	168	3	900	2	1	1
B2 - 307	Pea.Law Court Agent	Ö-4x14W	4	14	4	224	6	1800	5	5	0
B2 - 307	Manager Room	Ö-4x14W	4	14	2	112	2	600	1	1	0
BLOCK	ROOM NAME	LUM.TYPE	Z	P	N	L.T.P	E.S.	E.S.P	TEL	DATA	TV
B2 - 308	Pea.Law Court Agent	Ö-4x14W	4	14	4	224	6	1800	5	5	0
B2 - 308	Manager Room	Ö-4x14W	4	14	2	112	2	600	1	1	0
B2 - 309	Pea.Law Court Judge Room	Ö-4x14W	4	14	3	168	3	900	2	1	1
B2 - 310	Lawyer Resting Lounge	Ö-4x14W	4	14	6	336	5	1500	0	0	1
B2 - 311	5.Pea.Law Trial Hall	Ö-4x14W	4	14	6	336	4	1200	0	1	0
B2 - 312	Employee Room	Ö-1x36W	1	36	3	108	1	300	0	0	0
B2 - 313	Tea Office	Ö-1x36W	1	36	3	108	2	600	0	0	0
B2 - 314	6.Pea.Law Trial Hall	Ö-4x14W	4	14	6	336	4	1200	0	1	0
B2 - 315	7. Pea.Law Trial Hall	Ö-4x14W	4	14	6	336	4	1200	0	1	0
B2 - 316	Men WC	Ö-1x36W	1	36	3	108	1	2300	0	0	0
B2 - 317	Women WC	Ö-1x36W	1	36	3	108	1	2300	0	0	0
B2 - 318	8. Pea.Law Trial Hall	Ö-4x14W	4	14	6	336	4	1200	0	1	0
B2 - 319	Electricity Room	P1-2x36W	2	36	1	72	1	300	0	0	0
B2 - 320	Corridor	ATY2-4x18W	4	18	14	1008	6	1800	0	0	0
B2 - 320	Corridor	Ö-2x18W	2	18	26	936		0			
B2 - 321	13. Business Law Trial Hall	Ö-4x14W	4	14	6	336	4	1200	0	1	0
B2 - 322	Women WC	Ö-1x36W	1	36	3	108	1	2300	0	0	0
B2 - 323	Men WC	Ö-1x36W	1	36	3	108	1	2300	0	0	0
B2 - 324	12. Business Law Trial Hall	Ö-4x14W	4	14	6	336	4	1200	0	1	0
B2 - 325	1.Pea.Law Trial Hall	Ö-4x14W	4	14	6	336	4	1200	0	1	0
B2 - 326	Electricity Room	Ö-1x36W	1	36	3	108	1	300	0	0	0
B2 - 327	Tea Office	Ö-1x36W	1	36	3	108	2	600	0	0	0

BLOCK	ROOM NAME	LUM.TYPE	Z	P	N	L.T.P	E.S.	E.S.P	TEL	DATA	TV
B2 - 328	2. Pea.Law Trial Hall	Ö-4x14W	4	14	6	336	4	1200	0	1	0
B2 - 329	3. Pea.Law Trial Hall	Ö-4x14W	4	14	6	336	4	1200	0	1	0
B2 - 330	Men WC	Ö-1x36W	1	36	3	108	1	2300	0	0	0
B2 - 331	Women WC	Ö-1x36W	1	36	3	108	1	2300	0	0	0
B2 - 332	4. Pea.Law Trial Hall	Ö-4x14W	4	14	6	336	4	1200	0	1	0
B2 - 333	Fire Safety Hall	Ö-1x28W	1	28	3	84	0	0	0	0	0
B2 - 334	Fire Stairs	Ö-1x28W	1	28	2	56	0	0	0	0	0
B2 - 335	Pea.Law Court Judge Room	Ö-4x14W	4	14	3	168	2	600	1	1	1
B2 - 336	Pea.Law Court Agent	Ö-4x14W	4	14	4	224	6	1800	5	5	0
B2 - 336	Manager Room	Ö-4x14W	4	14	2	112	2	600	1	1	0
B2 - 337	Pea.Law Court Agent	Ö-4x14W	4	14	4	224	6	1800	5	5	0
B2 - 337	Manager Room	Ö-4x14W	4	14	2	112	2	600	1	1	0
B2 - 338	Pea.Law Court Judge Room	Ö-4x14W	4	14	3	168	3	900	1	1	1
B2 - 339	Pea.Law Court Judge Room	Ö-4x14W	4	14	3	168	3	900	1	1	1
B2 - 340	Pea.Law Court Agent	Ö-4x14W	4	14	4	224	6	1800	5	5	0
B2 - 340	Manager Room	Ö-4x14W	4	14	2	112	2	600	1	1	0
B2 - 341	Pea.Law Court Agent	Ö-4x14W	4	14	4	224	6	1800	5	5	0
B2 - 341	Manager Room	Ö-4x14W	4	14	2	112	2	600	1	1	0
B2 - 342	Pea.Law Court Judge Room	Ö-4x14W	4	14	3	168	3	900	1	1	1
B2 - 343	Business Law Judge Room	Ö-4x14W	4	14	3	168	3	900	1	1	1
B2 - 344	Business Law Agent	Ö-4x14W	4	14	4	224	6	1800	5	5	0
B2 - 344	Manager Room	Ö-4x14W	4	14	2	112	2	600	1	1	0
B2 - 345	Business Law Agent	Ö-4x14W	4	14	4	224	6	1800	5	5	0
B2 - 345	Manager Room	Ö-4x14W	4	14	2	112	2	600	1	1	0
B2 - 346	Business Law Judge Room	Ö-4x14W	4	14	3	168	3	900	1	1	1
B2 - 347	Corridor	Ö-1x36W	1	36	38	1368	4	1200	0	0	0
B2 - 347	Corridor	Ö-2x26W	2	26	12	624		0			

BLOCK	ROOM NAME	LUM.TYPE	Z	P	N	L.T.P	E.S.	E.S.P	TEL	DATA	TV
B3 - 301	Floor Hall	Ö-2x26W	2	26	41	2132	0	0	0	0	0
B3 - 301	Floor Hall	ATY2-4x18W	4	18	10	720		0			
B3 - 301	Floor Hall	Ö-2x18W	2	18	6	216		0			
B3 - 302	Electricity Room	P1-2x36W	2	36	1	72	1	300	0	0	0
B3 - 303	Electricity Room	P1-2x36W	2	36	1	72	1	300	0	0	0
B3 - 304	Floor Hall	ATY2-4x18W	4	18	6	432	0	0	0	0	0
B3 - 304	Floor Hall	Ö-2x18W	2	18	14	504		0			
B3 - 305	Depot	P1-2x36W	2	36	1	72	0	0	0	0	0
B3 - 306	Depot	P1-2x36W	2	36	1	72	0	0	0	0	0
B3 - 307	Business Law Judge Room	Ö-4x14W	4	14	3	168	3	900	1	1	1
BLOCK	ROOM NAME	LUM.TYPE	Z	P	N	L.T.P	E.S.	E.S.P	TEL	DATA	TV
B3 - 308	Business Law Agent	Ö-4x14W	4	14	4	224	6	1800	5	5	0
B3 - 308	Manager Room	Ö-4x14W	4	14	2	112	2	600	1	1	0
B3 - 309	Business Law Agent	Ö-4x14W	4	14	4	224	6	1800	5	5	0
B3 - 309	Manager Room	Ö-4x14W	4	14	2	112	2	600	1	1	0
B3 - 310	Business Law Judge Room	Ö-4x14W	4	14	3	168	3	900	1	1	1
B3 - 311	Business Law Judge Room	Ö-4x14W	4	14	3	168	3	900	1	1	1
B3 - 312	Business Law Agent	Ö-4x14W	4	14	4	224	6	1800	5	5	0
B3 - 312	Manager Room	Ö-4x14W	4	14	2	112	2	600	1	1	0
B3 - 313	Business Law Agent	Ö-4x14W	4	14	4	224	6	1800	5	5	0
B3 - 313	Manager Room	Ö-4x14W	4	14	2	112	2	600	1	1	0
B3 - 314	Business Law Judge Room	Ö-4x14W	4	14	3	168	3	900	1	1	1
B3 - 315	Business Law Judge Room	Ö-4x14W	4	14	4	224	3	900	1	1	1
B3 - 316	Business Law Agent	Ö-4x14W	4	14	4	224	6	1800	5	5	0
B3 - 316	Manager Room	Ö-4x14W	4	14	2	112	2	600	1	1	0
B3 - 317	Business Law Agent	Ö-4x14W	4	14	4	224	6	1800	5	5	0
B3 - 317	Manager Room	Ö-4x14W	4	14	2	112	2	600	1	1	0

BLOCK	ROOM NAME	LUM.TYPE	Z	P	N	L.T.P	E.S.	E.S.P	TEL	DATA	TV
B3 - 318	Business Law Judge Room	Ö-4x14W	4	14	3	168	3	900	1	1	1
B3 - 319	Depot	P1-2x36W	2	36	1	72	0	0	0	0	0
B3 - 320	Corridor	Ö-1x36W	1	36	37	1332	4	1200	0	0	0
B3 - 320	Corridor	Ö-2x26W	2	26	12	624		0			
B3 - 321	Fire Stairs	Ö-1x28W	1	28	2	56	0	0	0	0	0
B3 - 322	Fire Safety Hall	Ö-1x28W	1	28	1	28	0	0	0	0	0
B3 - 323	18.Business Law Trial Hall	Ö-4x14W	4	14	6	336	4	1200	0	1	0
B3 - 324	Women WC	Ö-1x36W	1	36	3	108	0	0	0	0	0
B3 - 325	Men WC	Ö-1x36W	1	36	3	108	0	0	0	0	0
B3 - 326	17.Business Law Trial Hall	Ö-4x14W	4	14	6	336	4	1200	0	1	0
B3 - 327	16.Business Law Trial Hall	Ö-4x14W	4	14	6	336	4	1200	0	1	0
B3 - 328	Photocopy Room	Ö-1x36W	1	36	3	108	0	0	0	0	0
B3 - 329	Electricity Room	Ö-1x36W	1	36	3	108	0	0	0	0	0
B3 - 330	15. Business Law Trial Hall	Ö-4x14W	4	14	6	336	4	1200	0	1	0
B3 - 331	14.Business Law Trial Hall	Ö-4x14W	4	14	6	336	4	1200	0	1	0
B3 - 332	Men WC	Ö-1x36W	1	36	3	108	0	0	0	0	0
B3 - 333	Women WC	Ö-1x36W	1	36	3	108	0	0	0	0	0
B3 - 334	13.Business Law Trial Hall	Ö-4x14W	4	14	6	336	4	1200	0	1	0
B3 - 335	Corridor	ATY2-4x18W	4	18	30	2160	6	1800	0	0	0
B3 - 335	Corridor	Ö-1x28W	1	28	26	728		0			
BLOCK	**ROOM NAME**	**LUM.TYPE**	**Z**	**P**	**N**	**L.T.P**	**E.S.**	**E.S.P**	**TEL**	**DATA**	**TV**
C1-301	Corridor	ATY2-4x18W	4	18	52	3744	8	2400	0	0	0
C1-301	Corridor	Ö-2x18W	2	18	2	72		0			
C1-302	25.Criminal Court Trial Hall	Ö-4x14W	4	14	12	672	4	1200	0	1	0
C1-303	1.Child Court Trial Hall	Ö-4x14W	4	14	12	672	4	1200	0	1	0
C1-304	2.Child Court Trial Hall	Ö-4x14W	4	14	12	672	4	1200	0	1	0
C1-305	Seminar Hall	Ö-4x14W	4	14	12	672	4	1200	0	1	0

BLOCK	ROOM NAME	LUM.TYPE	Z	P	N	L.T.P	E.S.	E.S.P	TEL	DATA	TV
C1-306	Women WC	Ö-1x36W	4	36	2	288	1	2300	0	0	0
C1-307	Men WC	Ö-1x36W	4	36	4	576	1	2300	0	0	0
C1-308	Preparation Room	Ö-4x14W	4	14	1	56	1	300	1	1	0
C1-309	Depot	P1-2x36W	2	36	1	72	1	300	0	0	0
C1-310	Detainee Stairs Hall	Ö-1x28W	1	28	1	28	0	0	0	0	0
C1-311	Electricity Room	P1-2x36W	2	36	1	72	1	300	0	0	0
C1-312	Photocopy Room	P1-2x36W	2	36	1	72	2	600	0	0	0
C1-313	Detainee Stairs Hall	Ö-1x28W	1	28	1	28	0	0	0	0	0
C1-314	Detainee Waiting Room	Ö-1x28W	1	28	1	28	0	0	0	0	0
C1-315	Lawyer İnterview	Ö-4x14W	4	14	1	56	1	300	0	0	0
C1-316	Consultation	Ö-4x14W	4	14	1	56	1	300	1	1	0
C1-317	Women WC	Ö-1x18W	1	18	2	36	1	2300	0	0	0
C1-317'	Men WC	Ö-1x18W	1	18	2	36	1	2300	0	0	0
C1-318	Consultation	Ö-4x14W	4	14	1	56	1	300	1	1	0
C1-319	Detainee Waiting Room.	Ö-1x28W	1	28	1	28	0	0	0	0	0
C1-320	Lawyer İnterview	Ö-4x14W	4	14	1	56	1	300	0	0	0
C1-321	Detainee Stairs Hall	Ö-1x28W	1	28	1	28	0	0	0	0	0
C1-322	Electricity Room	P1-2x36W	2	36	1	72	1	300	0	0	0
C1-323	Employee Room	P1-2x36W	2	36	1	72	1	300	0	0	0
C1-324	Detainee Stairs Hall	Ö-1x28W	1	28	1	28	0	0	0	0	0
C1-325	Detainee Waiting Room.	Ö-1x28W	1	28	1	28	0	0	0	0	0
C1-326	Lawyer İnterview	Ö-4x14W	4	14	1	56	1	300	0	0	0
C1-327	Consultation	Ö-4x14W	4	14	1	56	1	300	1	1	0
C1-328	Corridor	Ö-1x36W	1	36	34	1224	2	600	0	0	0
C1-328	Corridor	Ö-2x18W	2	18	27	972		0			
C1-328	Corridor	ATY2-4x18W	4	18	6	432		0			
C1-329	Criminal Court Memb.Room	Ö-4x14W	4	14	3	168	2	600	1	1	1
C1-330	Criminal Court President	Ö-4x14W	4	14	6	336	3	900	1	1	1

BLOCK	ROOM NAME	LUM.TYPE	Z	P	N	L.T.P	E.S.	E.S.P	TEL	DATA	TV
C1-331	Criminal Court Agent	Ö-4x14W	4	14	4	224	6	1800	5	5	0
C1-331	Manager Room	Ö-4x14W	4	14	2	112	2	600	1	1	0
C1-332	Criminal Court Memb.Room	Ö-4x14W	4	14	3	168	2	600	1	1	1
C1-333	Depot	P1-2x36W	2	36	1	72	0	0	0	0	0
C1-334	Fire Safety Hall	Ö-1x28W	1	28	1	28	0	0	0	0	0
C1-335	Fire Stairs	Ö-1x28W	1	28	2	56	0	0	0	0	0
C1-336	Depot	P1-2x36W	2	36	1	72	0	0	0	0	0
C1-337	Tea Office	Ö-1x36W	1	36	1	36	2	600	0	0	0
C1-338	Women WC	Ö-1x36W	1	36	2	72	1	2300	0	0	0
C1-339	Men WC	Ö-1x36W	1	36	2	72	1	2300	0	0	0
C1-340	Child Court President	Ö-4x14W	4	14	6	336	4	1200	2	1	1
C1-341	Child Court Agent	Ö-4x14W	4	14	6	336	7	2100	6	6	0
C1-341	Manager Room	Ö-4x14W	4	14	2	112	2	600	1	1	0
C1-342	Child Court Memb.Room	Ö-4x14W	4	14	3	168	3	900	1	1	1
C1-343	Child Court Memb.Room	Ö-4x14W	4	14	3	168	3	900	1	1	1
C1-344	Child Court Memb.Room	Ö-4x14W	4	14	3	168	3	900	1	1	1
C1-345	Child Court Memb.Room	Ö-4x14W	4	14	3	168	3	900	1	1	1
C1-346	Child Court President	Ö-4x14W	4	14	6	336	4	1200	2	1	1
C1-347	Child Court Agent	Ö-4x14W	4	14	4	224	6	1800	5	5	0
C1-347	Manager Room	Ö-4x14W	4	14	2	112	2	600	1	1	0
C1-348	psychologist	Ö-4x14W	4	14	3	168	3	900	1	1	1
C1-349	pedagogue	Ö-4x14W	4	14	3	168	3	900	1	1	1
C1-350	Social Services	Ö-4x14W	4	14	3	168	3	900	1	1	1
C1-351	psychologist	Ö-4x14W	4	14	3	168	3	900	1	1	1
C1-352	pedagogue	Ö-4x14W	4	14	3	168	3	900	1	1	1
C1-353	Social Services	Ö-4x14W	4	14	3	168	3	900	1	1	1
C1-354	Hall	Ö-1x36W	1	36	2	72	0	0	0	0	0

BLOCK	ROOM NAME	LUM.TYPE	Z	P	N	L.T.P	E.S.	E.S.P	TEL	DATA	TV
C2 - 301	Library	Ö-4x14W	4	14	20	1120	4	1200	2	2	0
BLOCK	ROOM NAME	LUM.TYPE	Z	P	N	L.T.P	E.S.	E.S.P	TEL	DATA	TV
C3 - 301	Corridor	ATY2-4x18W	4	18	52	3744	8	2400	0	0	0
C3 - 301	Corridor	Ö-2x18W	2	18	2	72		0			
C3 - 302	26.Criminal Court Trial Hall	Ö-4x14W	4	14	12	672	4	1200	0	1	0
C3 - 303	4.Child Court Trial Hall	Ö-4x14W	4	14	12	672	4	1200	0	1	0
C3 - 304	3.Child Court Trial Hall	Ö-4x14W	4	14	12	672	4	1200	0	1	0
C3 - 305	Seminar Hall	Ö-4x14W	4	14	12	672	4	1200	0	1	0
C3 - 306	Women WC	Ö-1x36W	1	36	2	72	1	2300	0	0	0
C3 - 307	Men WC	Ö-1x36W	1	36	4	144	1	2300	0	0	0
C3 - 308	Preparation Room	Ö-4x14W	4	14	1	56	1	300	0	0	0
C3 - 309	Depot	P1-2x36W	2	36	2	144	1	300	0	0	0
C3 - 310	Detainee Stairs Hall	Ö-1x28W	1	28	1	28	0	0	0	0	0
C3 - 311	Electricity Room	P1-2x36W	2	36	1	72	1	300	0	0	0
C3 - 312	Photocopy Room	P1-2x36W	2	36	1	72	2	600	0	0	0
C3 - 313	Detainee Stairs Hall	Ö-1x28W	1	28	1	28	0	0	0	0	0
C3 - 314	Detainee Waiting Room	Ö-1x28W	1	28	1	28	0	0	0	0	0
C3 - 315	Lawyer İnterview	Ö-4x14W	4	14	1	56	1	300	0	0	0
C3 - 316	Consultation	Ö-4x14W	4	14	1	56	1	300	1	1	0
C3 - 317	Women WC	Ö-1x18W	1	18	2	36	1	2300	0	0	0
C3 - 317'	Men WC	Ö-1x18W	1	18	2	36	1	2300	0	0	0
C3 - 318	Consultation	Ö-4x14W	4	14	1	56	1	300	1	1	0
C3 - 319	Detainee Waiting Room	Ö-1x28W	1	28	1	28	0	0	0	0	0
C3 - 320	Lawyer İnterview	Ö-4x14W	4	14	1	56	1	300	0	0	0
C3 - 321	Detainee Stairs Hall	Ö-1x28W	1	28	1	28	0	0	0	0	0
C3 - 322	Electricity Room	P1-2x36W	2	36	1	72	1	300	0	0	0
C3 - 323	Employee Room	P1-2x36W	2	36	1	72	2	600	0	0	0

BLOCK	ROOM NAME	LUM.TYPE	Z	P	N	L.T.P	E.S.	E.S.P	TEL	DATA	TV
C3 - 324	Detainee Stairs Hall	Ö-1x28W	1	28	1	28	0	0	0	0	0
C3 - 325	Detainee Waiting Room	Ö-1x28W	1	28	1	28	0	0	0	0	0
C3 - 326	Lawyer İnterview	Ö-4x14W	4	14	1	56	1	300	0	0	0
C3 - 327	Consultation	Ö-4x14W	4	14	1	56	1	300	1	1	0
C3 - 328	Corridor	Ö-1x36W	1	36	34	1224	2	600	0	0	0
C3 - 328	Corridor	Ö-2x18W	2	18	27	972		0			
C3 - 328	Corridor	ATY2-4x18W	4	18	6	432		0			
C3 - 329	Criminal Court Memb.Room	Ö-4x14W	4	14	3	168	3	900	1	1	1
C3 - 330	Criminal Court President	Ö-4x14W	4	14	6	336	4	1200	1	1	1
C3 - 331	Criminal Court Agent	Ö-4x14W	4	14	4	224	6	1800	5	5	
C3 - 331	Manager Room	Ö-4x14W	4	14	2	112	2	600	1	1	0
C3 - 332	Criminal Court Memb.Room	Ö-4x14W	4	14	3	168	3	900	1	1	1
C3 - 333	Depot	P1-2x36W	2	36	1	72	0	0	0	0	0
C3 - 334	Fire Safety Room	Ö-1x28W	1	28	1	28	0	0	0	0	0
C3 - 335	Fire Stairs	Ö-1x28W	1	28	1	28	0	0	0	0	0
C3 - 336	Depot	P1-2x36W	2	36	1	72	0	0	0	0	0
C3 - 337	Tea Office	Ö-1x36W	1	36	1	36	2	600	0	0	0
C3 - 338	Women WC	Ö-1x36W	1	36	2	72	1	2300	0	0	0
C3 - 339	Men WC	Ö-1x36W	1	36	2	72	1	2300	0	0	0
C3 - 340	Child Court President	Ö-4x14W	4	14	6	336	4	1200	2	1	1
C3 - 341	Child Court Agent	Ö-4x14W	4	14	6	336	7	2100	6	6	0
C3 - 341	Manager Room	Ö-4x14W	4	14	2	112	2	600	1	1	0
C3 - 342	Child Court Memb.Room	Ö-4x14W	4	14	3	168	3	900	1	1	1
C3 - 343	Child Court Memb.Room	Ö-4x14W	4	14	3	168	3	900	1	1	1
C3 - 344	Child Court Memb.Room	Ö-4x14W	4	14	3	168	3	900	1	1	1
C3 - 345	Child Court Memb.Room	Ö-4x14W	4	14	3	168	3	900	1	1	1
C3 - 346	Child Court President	Ö-4x14W	4	14	6	336	4	1200	2	1	1
C3 - 347	Child Court Agent	Ö-4x14W	4	14	4	224	6	1800	5	5	0

BLOCK	ROOM NAME	LUM.TYPE	Z	P	N	L.T.P	E.S.	E.S.P	TEL	DATA	TV
C3 - 347	Manager Room	Ö-4x14W	4	14	2	112	2	600	1	1	0
C3 - 348	psychologist	Ö-4x14W	4	14	3	168	3	900	1	1	1
C3 - 349	pedagogue	Ö-4x14W	4	14	3	168	3	900	1	1	1
C3 - 350	Social Services	Ö-4x14W	4	14	3	168	3	900	1	1	1
C3 - 351	psychologist	Ö-4x14W	4	14	3	168	3	900	1	1	1
C3 - 352	pedagogue	Ö-4x14W	4	14	3	168	3	900	1	1	1
C3 - 353	Social Services	Ö-4x14W	4	14	3	168	3	900	1	1	1
C3 - 354	Hall	Ö-1x36W	1	36	2	72	0	0	0	0	0
BLOCK	**ROOM NAME**	**LUM.TYPE**	**Z**	**P**	**N**	**L.T.P**	**E.S.**	**E.S.P**	**TEL**	**DATA**	**TV**
D1 - 301	Main Distribution Artery	ATY2-4x18W	4	18	20	1440	1	300	0	0	0
D1 - 302	Electricity Room	P1-2x36W	2	36	3	216	1	300	0	0	0
D1 - 303	Fire Stairs	Ö-1x28W	1	28	2	56	0	0	0	0	0
D1 - 304	Fire Safety Hall	Ö-1x28W	1	28	2	56	0	0	0	0	0
D1 - 305	Lawyer Resting Room	Ö-4x14W	4	14	6	336	5	1500	0	0	1
D1 - 306	Women WC	Ö-1x36W	1	36	4	144	1	2300	0	0	0
D1 - 306	Women WC	T-1x18W	1	18	4	72		0			
D1 - 307	Defective WC	Ö-1x36W	1	36	1	36	1	2300	0	0	0
D1 - 307	Defective WC	T-1x18W	1	18	1	18		0			
D1 - 308	Cleaning Room	P1-1x18W	1	18	1	18	0	0	0	0	0
D1 - 309	Men WC	Ö-1x36W	1	36	6	216	1	2300	0	0	0
D1 - 309	Men WC	T-1x18W	1	18	4	72		0			
D1 - 310	Fire Safety Hall	Ö-1x28W	1	28	1	28	0	0	0	0	0
D1 - 311	Fire Stairs	Ö-1x28W	1	28	2	56	0	0	0	0	0
BLOCK	**ROOM NAME**	**LUM.TYPE**	**Z**	**P**	**N**	**L.T.P**	**E.S.**	**E.S.P**	**TEL**	**DATA**	**TV**
D2 - 301	Corridor	Ö-1x36W	1	36	32	1152	3	900	0	0	0
D2 - 301	Corridor	Ö-2x26W	2	26	10	520		0			

BLOCK	ROOM NAME	LUM.TYPE	Z	P	N	L.T.P	E.S.	E.S.P	TEL	DATA	TV
D2 - 302	Lawyer İnterview	Ö-4x14W	4	14	3	168	2	600	1	1	0
D2 - 303	Fundam.Punish.Court Jud.Rm.	Ö-4x14W	4	14	3	168	3	900	2	1	1
D2 - 304	Fundam.Punish.Court Agent	Ö-4x14W	4	14	4	224	6	1800	5	5	0
D2 - 304	Manager Room	Ö-4x14W	4	14	2	112	2	600	1	1	0
D2 - 305	Fundam.Punish.Court Agent	Ö-4x14W	4	14	4	224	6	1800	5	5	0
D2 - 305	Manager Room	Ö-4x14W	4	14	2	112	2	600	1	1	0
D2 - 306	Fundam.Punish.Court Jud.Rm.	Ö-4x14W	4	14	3	168	3	900	2	1	1
D2 - 307	Lawyer İnterview	Ö-4x14W	4	14	3	168	2	600	1	1	0
D2 - 308	Fundam.Punish.Court Jud.Rm.	Ö-4x14W	4	14	3	168	3	900	2	1	1
D2 - 309	Fundam.Punish.Court Agent	Ö-4x14W	4	14	4	224	6	1800	5	5	0
D2 - 309	Manager Room	Ö-4x14W	4	14	2	112	2	600	1	1	0
D2 - 310	Fundam.Punish.Court Agent	Ö-4x14W	4	14	4	224	6	1800	5	5	0
D2 - 310	Manager Room	Ö-4x14W	4	14	2	112	2	600	1	1	0
D2 - 311	Fundam.Punish.Court Jud.Rm.	Ö-4x14W	4	14	3	168	2	600	2	1	1
D2 - 312	Lawyer İnterview	Ö-4x14W	4	14	3	168	2	600	1	1	0
D2 - 313	Lawyer Resting Room	Ö-4x14W	4	14	3	168	2	600	0	0	1
D2 - 314	Detainee Stairs Hall	Ö-1x28W	1	28	2	56	0	0	0	0	0
D2 - 315	44.Fundam.Punish.Court.Trial Hall	Ö-4x14W	4	14	6	336	4	1200	0	1	0
D2 - 316	Employee Room	Ö-1x36W	1	36	3	108	1	300	0	0	0
D2 - 317	Tea Office	Ö-1x36W	1	36	3	108	3	900	0	0	0
D2 - 318	43.Fundam.Punish.Court.Trial Hall	Ö-4x14W	4	14	6	336	4	1200	0	1	0
D2 - 319	Detainee Stairs Hall	Ö-1x28W	1	28	3	84	0	0	0	0	0
D2 - 320	42.Fundam.Punish.Court.Trial Hall	Ö-4x14W	4	14	6	336	4	1200	0	1	0
D2 - 321	Men WC	Ö-1x36W	1	36	3	108	1	2300	0	0	0
D2 - 322	Women WC	Ö-1x36W	1	36	3	108	1	2300	0	0	0
D2 - 323	41.Fundam.Punish.Court.Trial Hall	Ö-4x14W	4	14	6	336	4	1200	0	1	0
D2 - 324	Detainee Stairs Hall	Ö-1x28W	1	28	3	84	0	0	0	0	0
D2 - 325	Electricity Room	P1-2x36W	2	36	1	72	1	300	0	0	0

BLOCK	ROOM NAME	LUM.TYPE	Z	P	N	L.T.P	E.S.	E.S.P	TEL	DATA	TV
D2 - 326	Corridor	ATY2-4x18W	4	18	37	2664	6	1800	0	0	0
D2 - 326	Corridor	Ö-2x18W	2	18	59	2124		0			
D2 - 326	Corridor	Ö-1x28W	1	28	2	56		0			
D2 - 327	Detainee Stairs Hall	Ö-1x28W	1	28	3	84	0	0	0	0	0
D2 - 328	50.Fundam.Punish.Court.Trial Hall	Ö-4x14W	4	14	6	336	4	1200	0	1	0
D2 - 329	Women WC	Ö-1x36W	1	36	3	108	1	2300	0	0	0
D2 - 330	Men WC	Ö-1x36W	1	36	3	108	1	2300	0	0	0
D2 - 331	49.Fundam.Punish.Court.Trial Hall	Ö-4x14W	4	14	6	336	4	1200	0	1	0
D2 - 332	Detainee Stairs Hall	Ö-1x28W	1	28	3	84	0	0	0	0	0
D2 - 333	48.Fundam.Punish.Court.Trial Hall	Ö-4x14W	4	14	6	336	4	1200	0	1	0
D2 - 334	Electricity Room	Ö-1x36W	1	36	3	108	1	300	0	0	0
D2 - 335	Tea Office	Ö-1x36W	1	36	3	108	3	900	0	0	0
D2 - 336	47.Fundam.Punish.Court.Trial Hall	Ö-4x14W	4	14	6	336	4	1200	0	1	0
D2 - 337	Detainee Stairs Hall	Ö-1x28W	1	28	3	84	0	0	0	0	0
D2 - 338	46.Fundam.Punish.Court.Trial Hall	Ö-4x14W	4	14	6	336	4	1200	0	1	0
D2 - 339	Men WC	Ö-1x36W	1	36	3	108	1	2300	0	0	0
D2 - 340	Women WC	Ö-1x36W	1	36	3	108	1	2300	0	0	0
D2 - 341	45.Fundam.Punish.Court.Trial Hall	Ö-4x14W	4	14	6	336	4	1200	0	1	0
D2 - 342	Detainee Stairs Hall	Ö-1x28W	1	28	3	84	0	0	0	0	0
D2 - 343	Fire Safety Hall	Ö-1x28W	1	28	3	84	0	0	0	0	0
D2 - 344	Fire Stairs	Ö-1x28W	1	28	2	56	0	0	0	0	0
D2 - 345	Lawyer İnterview	Ö-4x14W	4	14	3	168	2	600	1	1	0
D2 - 346	Fundam.Punish.Court Jud.Rm.	Ö-4x14W	4	14	3	168	3	900	1	1	1
D2 - 347	Fundam.Punish.Court Agent	Ö-4x14W	4	14	4	224	6	1800	5	5	0
D2 - 347	Manager Room	Ö-4x14W	4	14	2	112	2	600	1	1	0
D2 - 348	Fundam.Punish.Court Agent	Ö-4x14W	4	14	4	224	6	1800	5	5	0
D2 - 348	Manager Room	Ö-4x14W	4	14	2	112	2	600	1	1	0
D2 - 349	Fundam.Punish.Court Jud.Rm.	Ö-4x14W	4	14	3	168	3	900	1	1	1

BLOCK	ROOM NAME	LUM.TYPE	Z	P	N	L.T.P	E.S.	E.S.P	TEL	DATA	TV
D2 - 350	Lawyer İnterview	Ö-4x14W	4	14	3	168	2	600	1	1	0
D2 - 351	Fundam.Punish.Court Jud.Rm.	Ö-4x14W	4	14	3	168	3	900	1	1	1
D2 - 352	Fundam.Punish.Court Agent	Ö-4x14W	4	14	4	224	6	1800	5	5	0
D2 - 352	Manager Room	Ö-4x14W	4	14	2	112	2	600	1	1	0
D2 - 353	Fundam.Punish.Court Agent	Ö-4x14W	4	14	4	224	6	1800	5	5	0
D2 - 353	Manager Room	Ö-4x14W	4	14	2	112	2	600	1	1	0
D2 - 354	Fundam.Punish.Court Jud.Rm.	Ö-4x14W	4	14	3	168	3	900	1	1	1
D2 - 355	Lawyer İnterview	Ö-4x14W	4	14	3	168	2	600	1	1	0
D2 - 356	Fundam.Punish.Court Jud.Rm.	Ö-4x14W	4	14	3	168	3	900	1	1	1
D2 - 357	Fundam.Punish.Court Agent	Ö-4x14W	4	14	4	224	6	1800	5	5	0
D2 - 357	Manager Room	Ö-4x14W	4	14	2	112	2	600	1	1	0
D2 - 358	Fundam.Punish.Court Agent	Ö-4x14W	4	14	4	224	6	1800	5	5	0
D2 - 358	Manager Room	Ö-4x14W	4	14	2	112	2	600	1	1	0
D2 - 359	Fundam.Punish.Court Jud.Rm.	Ö-4x14W	4	14	3	168	3	900	1	1	1
D2 - 360	Lawyer İnterview	Ö-4x14W	4	14	3	168	2	600	1	1	0
D2 - 361	Corridor	Ö-1x36W	1	36	46	1656	4	1200	0	0	0
D2 - 361	Corridor	Ö-2x26W	2	26	12	624		0			
BLOCK	ROOM NAME	LUM.TYPE	Z	P	N	L.T.P	E.S.	E.S.P	TEL	DATA	TV
D3 - 301	Floor Hall	Ö-2x26W	2	26	41	2132	1	300	0	0	0
D3 - 301	Floor Hall	ATY2-4x18W	4	18	10	720		0			
D3 - 301	Floor Hall	Ö-2x18W	2	18	6	216		0			
D3 - 302	Electricity Room	P1-2x36W	2	36	1	72	1	300	0	0	0
D3 - 303	Electricity Room	P1-2x36W	2	36	1	72	1	300			
D3 - 304	Floor Hall	Ö-2x18W	2	18	14	504	0	0	0	0	0
D3 - 304	Floor Hall	ATY2-4x18W	4	18	6	432		0			
D3 - 305	Depot	P1-2x36W	2	36	1	72	0	0	0	0	0
D3 - 306	Depot	P1-2x36W	2	36	1	72		0			

BLOCK	ROOM NAME	LUM.TYPE	Z	P	N	L.T.P	E.S.	E.S.P	TEL	DATA	TV
D3 - 307	Mental&Polit. Law Crt. Jdg. Room	Ö-4x14W	4	14	3	168	3	900	1	1	1
D3 - 308	Mental&Political Law Agent	Ö-4x14W	4	14	4	224	6	1800	5	5	0
D3 - 308	Manager Room	Ö-4x14W	4	14	2	112	2	600	1	1	0
D3 - 309	Mental&Political Law Agent	Ö-4x14W	4	14	4	224	6	1800	5	5	0
D3 - 309	Manager Room	Ö-4x14W	4	14	2	112	2	600	1	1	0
D3 - 310	Mental&Polit. Law Crt. Jdg. Room	Ö-4x14W	4	14	3	168	3	900	1	1	1
D3 - 311	Mental&Polit. Law Crt. Jdg. Room	Ö-4x14W	4	14	3	168	3	900	1	1	1
D3 - 312	Mental&Political Law Agent	Ö-4x14W	4	14	4	224	6	1800	5	5	0
D3 - 312	Manager Room	Ö-4x14W	4	14	2	112	2	600	1	1	0
D3 - 313	Mental&Political Law Agent	Ö-4x14W	4	14	4	224	6	1800	5	5	0
D3 - 313	Manager Room	Ö-4x14W	4	14	2	112	2	600	1	1	0
D3 - 314	Mental&Polit. Law Crt. Jdg. Room	Ö-4x14W	4	14	3	168	3	900	1	1	1
D3 - 315	Mental&Polit. Law Crt. Jdg. Room	Ö-4x14W	4	14	3	168	3	900	1	1	1
D3 - 316	Mental&Political Pun. Agent	Ö-4x14W	4	14	4	224	6	1800	5	5	0
D3 - 316	Manager Room	Ö-4x14W	4	14	2	112	2	600	1	1	0
D3 - 317	Mental&Political Pun.Agent	Ö-4x14W	4	14	4	224	6	1800	5	5	0
D3 - 317	Manager Room	Ö-4x14W	4	14	2	112	2	600	1	1	0
D3 - 318	Mental&Polit. Law Crt. Jdg. Room	Ö-4x14W	4	14	3	168	3	900	1	1	1
D3 - 319	Depot	P1-2x36W	2	36	1	72	0	0	0	0	0
D3 - 320	Corridor	Ö-1x36W	1	36	37	1332	4	1200	0	0	0
D3 - 320	Corridor	Ö-2x26W	2	26	12	624					
D3 - 321	Fire Stairs	Ö-1x28W	1	28	2	56	0	0	0	0	0
D3 - 322	Fire Safety Hall	Ö-1x28W	1	28	1	28	0	0	0	0	0
D3 - 323	8.Mental&Pol.Punish.Court Trial Hall	Ö-4x14W	4	14	6	336	4	1200	0	1	0
D3 - 324	Women WC	Ö-1x36W	1	36	3	108	1	2300	0	0	0
D3 - 325	Men WC	Ö-1x36W	1	36	3	108	1	2300	0	0	0
D3 - 326	7. Mental&Pol.Punish.Court Trial Hall	Ö-4x14W	4	14	6	336	4	1200	0	1	0
D3 - 327	4. Mental&Pol.Law Court Trial Hall	Ö-4x14W	4	14	6	336	4	1200	0	1	0

BLOCK	ROOM NAME	LUM.TYPE	Z	P	N	L.T.P	E.S.	E.S.P	TEL	DATA	TV
D3 - 328	Photocopy Room	Ö-1x36W	1	36	3	108	2	600	0	0	0
D3 - 329	Electricity Room	Ö-1x36W	1	36	3	108	1	300	0	0	0
D3 - 330	3. Mental&Pol.Law Court Trial Hall	Ö-4x14W	4	14	6	336	4	1200	0	1	0
D3 - 331	2. Mental&Pol.Law Court Trial Hall	Ö-4x14W	4	14	6	336	4	1200	0	1	0
D3 - 332	Men WC	Ö-1x36W	1	36	3	108	1	2300	0	0	0
D3 - 333	Women WC	Ö-1x36W	1	36	3	108	1	2300	0	0	0
D3 - 334	1. Mental&Pol.Law Court Trial Hall	Ö-4x14W	4	14	6	336	4	1200	0	1	0
D3 - 335	Corridor	ATY2-4x18W	4	18	30	2160	6	1800	0	0	0
D3 - 335	Corridor	Ö-1x28W	1	28	26	728					
A1 BLOCK	**ROOM NAME**	**LUM TYPES**	**N**	**Z**	**P**	**L.T.P.**	**E.S.**	**E.S.P**	**TEL**	**DT**	**TV**
A1-701	Main Distribution Corridor	ATY2-4x18W	48	4	18	3456					
A1-702	Electricity	P1-1x36W	1	1	36	36	1	300			
A1-703	Floor Hall	Ö-2x28W	32	2	28	1792	2	600			
A1-703	Floor Hall	Ö-1x28W	2	1	28	56					
A1-703	Floor Hall	P1-1x36W	26	1	36	936					
A1-704	Private Inquiry Room	Ö-4x14W	3	4	14	168	3	900	2	2	
A1-705	Private Inquiry Room	Ö-4x14W	3	4	14	168	3	900	2	2	
A1-706	Private Inquiry Room	Ö-4x14W	3	4	14	168	3	900	2	2	
A1-707	Private Inquiry Room	Ö-4x14W	3	4	14	168	3	900	2	2	
A1-708	Public Prosecutor	Ö-4x14W	3	4	14	168	3	900	2	1	1
A1-709	Fire Security Hall	Ö-1x28W	1	1	28	28					
A1-710	Fire Stairs	Ö-1x28W	2	1	28	56					
A1-711	Officer Crimes	Ö-4x14W	6	4	14	336	9	2700	8	8	
A1-712	Correspondence Clerical Office	Ö-4x14W	8	4	14	448	8	2400	8	8	
A1-713	Officer Crimes Prosecutor	Ö-4x14W	3	4	14	168	3	900	2	1	1
A1-714	Officer Crimes Prosecutor	Ö-4x14W	3	4	14	168	3	900	2	1	1
A1-715	Officer Crimes Prosecutor	Ö-4x14W	3	4	14	168	3	900	2	1	1

A1 BLOCK	ROOM NAME	LUM TYPES	N	Z	P	L.T.P.	E.S.	E.S.P	TEL	DT	TV
A1-716	Officer Crimes	Ö-4x14W	6	4	14	336	9	2700	8	8	
A1-717	Private Inquiry Room	Ö-4x14W	3	4	14	168	3	900	1	1	1
A1-718	Service Stairs	Ö-1x28W	2	1	28	56					
A1-719	Service Hall	Ö-2x28W	4	2	28	224					
A1-720	Hall	Ö-1x18W	4	1	18	72					
A1-721	Women Rest Room	Ö-1x36W	3	1	36	108	2	2300			
A1-722	Defective Resr room	Ö-1x36W	1	1	36	36					
A1-723	Men Rest Room	Ö-1x36W	3	1	36	108	1	2300			
A1-724	Servant Room	P1-2x36W	2	2	36	144	2	600	1		
A1-725	Base Clerical Office	Ö-4x14W	8	4	14	448	11	3300	11	11	
A1-726	Floor Hall	Ö-2x26W	34	2	26	1768					
A1-726	Floor Hall	Ö-1x28W	3	1	28	84					
A1-726	Floor Hall	P1-1x36W	32	1	36	1152					
A1-727	Floor Hall	Ö-2x26W	81	2	26	4212	4	1200			
A1-728	Supplement Crimes Prosecutor	Ö-4x14W	3	4	14	168	3	900	2	1	1
A1-729	Supplement Crimes Prosecutor	Ö-4x14W	3	4	14	168	3	900	2	1	1
A1-730	Supplement Crimes Prosecutor	Ö-4x14W	3	4	14	168	3	900	2	1	1
A1-731	Supplemet Crimes Clerical Office	Ö-4x14W	6	4	14	336	7	2100	7	7	
A1-732	Supplement Crimes Prosecutor	Ö-4x14W	3	4	14	168	3	900	2	1	1
A1-733	Supplement Crimes Prosecutor	Ö-4x14W	3	4	14	168	3	900	2	1	1
A1-734	Supplement Crimes Prosecutor	Ö-4x14W	3	4	14	168	3	900	2	1	1
A1-735	Hall	Ö-1x18W	4	1	18	72					
A1-736	Men Rest Room	Ö-1x36W	3	1	36	108	2	2300			
A1-737	Cleaning Room	Ö-1x36W	1	1	36	36					
A1-738	Women Rest Room	Ö-1x36W	3	1	36	108	2	2300			
A1-739	Supplement Crimes Prosecutor	Ö-4x14W	8	4	14	448	11	3300	11	11	
A1-740	Supplement Crimes Clerical Office	Ö-4x14W	6	4	14	336	7	2100	7	7	
A1-741	Supplement Crimes Prosecutor	Ö-4x14W	3	4	14	168	3	900	2	1	1

A1 BLOCK	ROOM NAME	LUM TYPES	N	Z	P	L.T.P.	E.S.	E.S.P	TEL	DT	TV
A1-742	Supplement Crimes Prosecutor	Ö-4x14W	3	4	14	168	3	900	2	1	1
A1-743	Supplement Crimes Prosecutor	Ö-4x14W	3	4	14	168	3	900	2	1	1
A1-744	Supplement Crimes Prosecutor	Ö-4x14W	3	4	14	168	3	900	2	1	1
A1-745	Correspondence Crimes Prosecutor	Ö-4x14W	3	4	14	168	3	900	2	1	1
A1-746	Fire Stairs	Ö-1x28W	2	1	28	56					
A1-747	Fire Security Hall	Ö-1x28W	1	1	28	28					
A1-748	Correspondence Prosecutor	Ö-4x14W	3	4	14	168	3	900	2	1	1
A1-749	Correspondence Clerical Office	Ö-4x14W	6	4	14	336	6	1800	6	6	
A1-750	Correspondence Clerical Office	Ö-4x14W	6	4	14	336	6	1800	6	6	
A1-750	Electricity	P1-2x36W	1	2	36	72	1	300			
A1-752	Floor Hall	Ö-2x28W	32	2	28	1792	2	600			
A1-752	Floor Hall	P1-1x36W	26	1	36	936					
A1-752	Floor Hall	Ö-1x28W	2	1	28	56					
A1-753	Servant Room	P1-2x36W	2	2	36	144	1	300			
B1 BLOCK	**ROOM NAME**	**LUM TYPES**	**N**	**Z**	**P**	**L.T.P.**	**E.S.**	**E.S.P**	**TEL**	**DT**	**TV**
B1-701	Main Corridor	ATY2-4x18W	20	4	18	1440	1	300			
B1-701	Main Corridor	Ö-2x18W	6	2	18	216		0			
B1-702	Electricity	P1-1x36W	3	1	36	108	1	300			
B1-703	Fire Stairs	Ö-1x28W	2	1	28	56	2	600			
B1-704	Fire Security Hall	Ö-1x28W	1	1	28	28	1	300			
B1-705	Lawyer Resting Room	Ö-4x14W	6	4	14	336	5	1500			
B1-706	Women Rest Room	Ö-1x36W	4	1	36	144	2	600			
B1-706	Women Rest Room	T 1X18W	4	1	18	72		0			
B1-707	Defective Rest Room	Ö-1x36W	1	1	36	36		0			
B1-708	Cleaning Room	P1-1x18W	1	1	18	18		0			
B1-709	Men Rest Room	Ö-1x36W	6	1	36	216	2	600			
B1-709	Men Rest Room	T 1X18W	4	1	18	72		0			

B1 BLOCK	ROOM NAME	LUM TYPES	N	Z	P	L.T.P.	E.S.	E.S.P	TEL	DT	TV
B1-710	Fire Security Hall	Ö-1x28W	1	1	28	28		0			
B1-711	Fire Stairs	Ö-1x28W	2	1	28	56		0			
B2 BLOCK	**ROOM NAME**	**LUM TYPES**	**N**	**Z**	**P**	**L.T.P.**	**E.S.**	**E.S.P**	**TEL**	**DT**	**TV**
B2-701	Corridor	Ö-1x36W	26	1	36	936	3	900			
B2-701	Corridor	Ö-2x18W	6	2	28	336					
B2-702	Public Prosecutor	Ö-4x14W	3	4	14	168	3	900	2	1	1
B2-703	Public Prosecutor	Ö-4x14W	3	4	14	168	3	900	2	1	1
B2-704	Public Prosecutor	Ö-4x14W	3	4	14	168	3	900	2	1	1
B2-705	Public Prosecutor	Ö-4x14W	3	4	14	168	3	900	2	1	1
B2-706	Public Prosecutor	Ö-4x14W	3	4	14	168	3	900	2	1	1
B2-707	Public Prosecutor	Ö-4x14W	3	4	14	168	3	900	2	1	1
B2-708	Public Prosecutor	Ö-4x14W	3	4	14	168	3	900	2	1	1
B2-709	Public Prosecutor	Ö-4x14W	3	4	14	168	3	900	2	1	1
B2-710	Public Prosecutor	Ö-4x14W	3	4	14	168	3	900	2	1	1
B2-711	Public Prosecutor	Ö-4x14W	3	4	14	168	3	900	2	1	1
B2-712	Public Prosecutor	Ö-4x14W	3	4	14	168	3	900	2	1	1
B2-713	Public Prosecutor	Ö-4x14W	3	4	14	168	3	900	2	1	1
B2-714	General Preparation	Ö-4x14W	6	4	14	336	6	1800	5	5	
B2-715	Servant Room	Ö2-1x36W	3	1	36	108	1	300			
B2-716	Canteen	Ö2-1x36W	3	1	36	108	3	900			
B2-717	Public Prosecutor	Ö-4x14W	3	4	14	168	3	900	2	1	1
B2-718	Public Prosecutor	Ö-4x14W	3	4	14	168	3	900	2	1	1
B2-719	Public Prosecutor	Ö-4x14W	3	4	14	168	3	900	2	1	1
B2-720	Men Rest Room	Ö2-1x36W	3	1	36	108	2	2300			
B2-721	Women Rest Room	Ö2-1x36W	3	1	36	108	2	2300			
B2-722	General Preparation	Ö-4x14W	6	4	14	336	6	1800	10	5	
B2-723	Electricity	Ö-2x18W	1	2	28	56					

B2 BLOCK	ROOM NAME	LUM TYPES	N	Z	P	L.T.P.	E.S.	E.S.P	TEL	DT	TV
B2-724	General Preparation	Ö-4x14W	9	4	14	504	6	1800	5	5	
B2-725	Women Rest Room	Ö2-1x36W	3	1	36	108	2	2300			
B2-726	Men Rest Room	Ö2-1x36W	3	1	36	108	2	2300			
B2-727	Public Prosecutor	Ö-4x14W	3	4	14	168	3	900	2	1	1
B2-728	Public Prosecutor	Ö-4x14W	3	4	14	168	3	900	2	1	1
B2-729	Public Prosecutor	Ö-4x14W	3	4	14	168	3	900	2	1	1
B2-730	Electricity	Ö-1x36W	3	1	36	108	1	300			
B2-731	Canteen	Ö-1x36W	3	1	36	108	2	600			
B2-732	Public Prosecutor	Ö-4x14W	3	4	14	168	3	900	2	1	1
B2-733	Public Prosecutor	Ö-4x14W	3	4	14	168	3	900	2	1	1
B2-734	Public Prosecutor	Ö-4x14W	3	4	14	168	3	900	2	1	1
B2-735	Men Rest Room	Ö2-1x36W	3	1	36	108	2	2300			
B2-736	Women Rest Room	Ö2-1x36W	3	1	36	108	2	2300			
B2-737	General Preparation	Ö-4x14W	9	4	14	504	6	1800	5	5	
B2-738	Fire Security Hall	Ö-1x28W	4	1	28	112					
B2-739	Fire Stairs	Ö-1x28W	1	1	28	28					
B2-740	Public Prosecutor	Ö-4x14W	3	4	14	168	3	900	2	1	1
B2-741	Public Prosecutor	Ö-4x14W	3	4	14	168	3	900	2	1	1
B2-742	Public Prosecutor	Ö-4x14W	3	4	14	168	3	900	2	1	1
B2-743	Public Prosecutor	Ö-4x14W	3	4	14	168	3	900	2	1	1
B2-744	Public Prosecutor	Ö-4x14W	3	4	14	168	3	900	2	1	1
B2-745	Public Prosecutor	Ö-4x14W	3	4	14	168	3	900	2	1	1
B2-746	Public Prosecutor	Ö-4x14W	3	4	14	168	3	900	2	1	1
B2-747	Public Prosecutor	Ö-4x14W	3	4	14	168	3	900	2	1	1
B2-748	Public Prosecutor	Ö-4x14W	3	4	14	168	3	900	2	1	1
B2-749	Public Prosecutor	Ö-4x14W	3	4	14	168	3	900	2	1	1
B2-750	Public Prosecutor	Ö-4x14W	3	4	14	168	3	900	2	1	1
B2-751	Public Prosecutor	Ö-4x14W	3	4	14	168	3	900	2	1	1

B2 BLOCK	ROOM NAME	LUM TYPES	N	Z	P	L.T.P.	E.S.	E.S.P	TEL	DT	TV
B2-752	Public Prosecutor	Ö-4x14W	3	4	14	168	3	900	2	1	1
B2-753	Public Prosecutor	Ö-4x14W	3	4	14	168	3	900	2	1	1
B2-754	Public Prosecutor	Ö-4x14W	3	4	14	168	3	900	2	1	1
B2-755	Public Prosecutor	Ö-4x14W	3	4	14	168	3	900	2	1	1
B2-756	Public Prosecutor	Ö-4x14W	3	4	14	168	3	900	2	1	1
B2-757	Public Prosecutor	Ö-4x14W	3	4	14	168	3	900	2	1	1
B2-758	Corridor	Ö-1x36W	38	1	36	1368	4	1200			
B2-759	Terrace	Ö-2x18W	78	2	28	4368					
B2-759	Terrace	ATY2-4x18W	8	4	18	576					
B3 BLOCK	ROOM NAME	LUM TYPES	N	Z	P	L.T.P.	E.S.	E.S.P	TEL	DT	TV
B3-701	Floor Hall	Ö-2x26W	40	2	26	2080	1	300			
B3-701	Floor Hall	ATY2-4x18W	23	4	18	1656					
B3-702	Electricity	P1-2x36W	1	2	36	72	1	300			
B3-703	Electricity	P1-2x36W	1	2	36	72	1	300			
B3-704	Floor Hall	Ö-2x26W	13	2	36	936					
B3-704	Floor Hall	ATY2-4x18W	6	4	18	432					
B3-704	Floor Hall	Ö-2x18W	1	2	18	36					
B3-705	Store	P1-1x36W	1	1	36	36					
B3-706	Store	P1-1x36W	2	1	36	72					
B3-707	Public Prosecutor	Ö-4x14W	3	4	14	168	3	900	2	1	1
B3-708	Public Prosecutor	Ö-4x14W	3	4	14	168	3	900	2	1	1
B3-709	Public Prosecutor	Ö-4x14W	3	4	14	168	3	900	2	1	1
B3-710	Public Prosecutor	Ö-4x14W	3	4	14	168	3	900	2	1	1
B3-711	Public Prosecutor	Ö-4x14W	3	4	14	168	3	900	2	1	1
B3-712	Public Prosecutor	Ö-4x14W	3	4	14	168	3	900	2	1	1
B3-713	Public Prosecutor	Ö-4x14W	3	4	14	168	3	900	2	1	1
B3-714	Public Prosecutor	Ö-4x14W	3	4	14	168	3	900	2	1	1

B3 BLOCK	ROOM NAME	LUM TYPES	N	Z	P	L.T.P.	E.S.	E.S.P	TEL	DT	TV
B3-715	Public Prosecutor	Ö-4x14W	3	4	14	168	3	900	2	1	1
B3-716	Public Prosecutor	Ö-4x14W	3	4	14	168	3	900	2	1	1
B3-717	Public Prosecutor	Ö-4x14W	3	4	14	168	3	900	2	1	1
B3-718	Public Prosecutor	Ö-4x14W	3	4	14	168	3	900	2	1	1
B3-719	Public Prosecutor	Ö-4x14W	3	4	14	168	3	900	2	1	1
B3-720	Public Prosecutor	Ö-4x14W	3	4	14	168	3	900	2	1	1
B3-721	Public Prosecutor	Ö-4x14W	3	4	14	168	3	900	2	1	1
B3-722	Public Prosecutor	Ö-4x14W	3	4	14	168	3	900	2	1	1
B3-723	Public Prosecutor	Ö-4x14W	3	4	14	168	3	900	2	1	1
B3-724	Public Prosecutor	Ö-4x14W	3	4	14	168	3	900	2	1	1
B3-725	Public Prosecutor	Ö-4x14W	3	4	14	168	3	900	2	1	1
B3-726	Public Prosecutor	Ö-4x14W	3	4	14	168	3	900	2	1	1
B3-727	Corridor	Ö-1x36W	43	1	36	1548	4	1200			
B3-728	Fire Stairs	Ö-1x28W	3	1	28	84					
B3-729	General Preparation	Ö-4x14W	9	4	14	504	6	1800	5	5	
B3-730	Women Rest Room	Ö2-1x36W	3	1	36	108	2	2300			
B3-731	Men Rest Room	Ö2-1x36W	3	1	36	108	2	2300			
B3-732	Public Prosecutor	Ö-4x14W	3	4	14	168	3	900	2	1	1
B3-733	Public Prosecutor	Ö-4x14W	3	4	14	168	3	900	2	1	1
B3-734	Public Prosecutor	Ö-4x14W	3	4	14	168	3	900	2	1	1
B3-735	Photocopy	Ö-1x36W	3	1	36	108	2	600			
B3-736	Electricity	Ö-1x36W	3	1	36	108	1	300			
B3-737	Public Prosecutor	Ö-4x14W	3	4	14	168	3	900	2	1	1
B3-738	Public Prosecutor	Ö-4x14W	3	4	14	168	3	900	2	1	1
B3-739	Public Prosecutor	Ö-4x14W	3	4	14	168	3	900	2	1	1
B3-740	Men Rest Room	Ö2-1x36W	3	1	36	108	2	2300			
B3-741	Women Rest Room	Ö2-1x36W	3	1	36	108	2	2300			
B3-742	General Preparation	Ö-4x14W	9	4	14	504	6	1800	5	5	

B3 BLOCK	ROOM NAME	LUM TYPES	N	Z	P	L.T.P.	E.S.	E.S.P	TEL	DT	TV
B3-743	Corridor	Ö-2x18W	42	2	18	1512					
C1 BLOCK	**ROOM NAME**	**LUM TYPES**	**N**	**Z**	**P**	**L.T.P.**	**E.S.**	**E.S.P**	**TEL**	**DT**	**TV**
C1-701	Corridor	ATY2-4x18W	40	4	18	2880	8	2400			
C1-702	Juvenile Court Trial Hall	Ö-4x14W	6	4	14	336	4	1200		1	
C1-702	Juvenile Court Trial Hall	Ö-2x18W	12	2	18	432	4	1200		1	
C1-703	Juvenile Court Trial Hall	Ö-4x14W	6	4	14	336	4	1200		1	
C1-703	Juvenile Court Trial Hall	Ö-2x18W	12	2	18	432	4	1200		1	
C1-704	Juvenile Court Trial Hall	Ö-4x14W	6	4	14	336	4	1200		1	
C1-704	Juvenile Court Trial Hall	Ö-2x18W	12	2	18	432	4	1200		1	
C1-705	Juvenile Court Trial Hall	Ö-4x14W	6	4	14	336	4	1200		1	
C1-705	Juvenile Court Trial Hall	Ö-2x18W	12	2	18	432	4	1200		1	
C1-706	Juvenile Court Trial Hall	Ö-4x14W	6	4	14	336	4	1200		1	
C1-706	Juvenile Court Trial Hall	Ö-2x18W	12	2	18	432	4	1200		1	
C1-707	Juvenile Court Trial Hall	Ö-4x14W	6	4	14	336	4	1200		1	
C1-707	Juvenile Court Trial Hall	Ö-2x18W	12	2	18	432	4	1200		1	
C1-708	Juvenile Court Trial Hall	Ö-4x14W	6	4	14	336	4	1200		1	
C1-708	Juvenile Court Trial Hall	Ö-2x18W	12	2	18	432	4	1200		1	
C1-709	Juvenile Court Trial Hall	Ö-4x14W	6	4	14	336	4	1200		1	
C1-709	Juvenile Court Trial Hall	Ö-2x18W	12	2	18	432	4	1200		1	
C1-710	Hall	Ö-1x36W	2	1	36	72					
C1-711	Women Rest Room	Ö-1x36W	2	1	36	72	2	2300			
C1-712	Men Rest Room	Ö-1x36W	4	1	36	144	2	2300			
C1-713	Store	ATY2-4x18W	6	4	18	432	1	300			
C1-714	Electricity	P1-2x36W	1	2	36	72	1	300			
C1-715	Photocopy	P1-2x36W	1	2	36	72	1	300			
C1-716	Store	ATY2-4x18W	6	4	18	432	1	300			
C1-717	Women Rest Room	Ö-1x18W	2	1	18	36	2	2300			

C1 BLOCK	ROOM NAME	LUM TYPES	N	Z	P	L.T.P.	E.S.	E.S.P	TEL	DT	TV
C1-718	Men Rest Room	Ö-1x18W	2	1	18	36	2	2300			
C1-719	Store	ATY2-4x18W	6	4	18	432	1	300			
C1-720	Electricity	P1-2x36W	1	2	36	72	1	300			
C1-721	Servant Room	P1-2x36W	1	2	36	72	1	300			
C1-722	Store	ATY2-4x18W	1	4	18	72	1	300			
C1-723	Corridor	Ö-1x36W	34	1	36	1224	2	600			
C1-724	Juvenile Court Judge Room	Ö-4x14W	3	4	14	168	3	900	1	1	1
C1-725	Juvenile Court Clerical Office	Ö-4x14W	6	4	14	336	8	2400	6	6	
C1-726	Juvenile Court Clerical Office	Ö-4x14W	6	4	14	336	8	2400	6	6	
C1-727	Juvenile Court Judge Room	Ö-4x14W	3	4	14	168	3	900	1	1	1
C1-728	Store	P1-1x36W	1	1	36	36					
C1-729	Room	Ö-4x14W	3	4	14	168	2	600			
C1-730	Fire Security Hall	Ö-1x28W	1	1	28	28					
C1-731	Fire Stairs	Ö-1x28W	2	1	28	56					
C1-732	Store	P1-1x36W	1	1	36	36					
C1-733	Canteen	Ö-1x36W	1	1	36	36	3	900			
C1-734	Women Rest Room	Ö-1x36W	2	1	36	72	2	2300			
C1-735	Men Rest Room	Ö-1x36W	2	1	36	72	2	2300			
C1-736	Juvenile Court Clerical Office	Ö-4x14W	6	4	14	336	8	2400	6	6	
C1-737	Juvenile Court Clerical Office	Ö-4x14W	8	4	14	448	10	3000	7	7	
C1-738	Juvenile Court Judge Room	Ö-4x14W	3	4	14	168	3	900	1	1	1
C1-739	Juvenile Court Judge Room	Ö-4x14W	3	4	14	168	3	900	1	1	1
C1-740	Juvenile Court Clerical Office	Ö-4x14W	6	4	14	336	8	2400	6	6	
C1-741	Juvenile Court Judge Room	Ö-4x14W	3	4	14	168	3	900	1	1	1
C1-742	Juvenile Court Judge Room	Ö-4x14W	3	4	14	168	3	900	1	1	1
C1-743	Juvenile Court Clerical Office	Ö-4x14W	6	4	14	336	8	2400	6	6	
C1-744	Juvenile Court Clerical Office	Ö-4x14W	6	4	14	336	8	2400	6	6	
C1-745	Juvenile Court Judge Room	Ö-4x14W	3	4	14	168	3	900	1	1	1

C1 BLOCK	ROOM NAME	LUM TYPES	N	Z	P	L.T.P.	E.S.	E.S.P	TEL	DT	TV
C1-746	Juvenile Court Judge Room	Ö-4x14W	3	4	14	168	3	900	1	1	1
C1-747	Juvenile Court Clerical Office	Ö-4x14W	6	4	14	336	8	2400	6	6	
C3 BLOCK	**ROOM NAME**	**LUM TYPES**	**N**	**Z**	**P**	**L.T.P.**	**E.S.**	**E.S.P**	**TEL**	**DT**	**TV**
C3-701	Corridor	ATY2-4x18W	40	4	18	2880	8	2400			
C3-702	Juvenile Court Trial Hall	Ö-4x14W	6	4	14	336	4	1200		1	
C3-702	Juvenile Court Trial Hall	Ö-2x18W	12	2	18	432	4	1200		1	
C3-703	Juvenile Court Trial Hall	Ö-4x14W	6	4	14	336	4	1200		1	
C3-703	Juvenile Court Trial Hall	Ö-2x18W	12	2	18	432	4	1200		1	
C3-704	Juvenile Court Trial Hall	Ö-4x14W	6	4	14	336	4	1200		1	
C3-704	Juvenile Court Trial Hall	Ö-2x18W	12	2	18	432	4	1200		1	
C3-705	Juvenile Court Trial Hall	Ö-4x14W	6	4	14	336	4	1200		1	
C3-705	Juvenile Court Trial Hall	Ö-2x18W	12	2	18	432	4	1200		1	
C3-706	Juvenile Court Trial Hall	Ö-4x14W	6	4	14	336	4	1200		1	
C3-706	Juvenile Court Trial Hall	Ö-2x18W	12	2	18	432	4	1200		1	
C3-707	Juvenile Court Trial Hall	Ö-4x14W	6	4	14	336	4	1200		1	
C3-707	Juvenile Court Trial Hall	Ö-2x18W	12	2	18	432	4	1200		1	
C3-708	Juvenile Court Trial Hall	Ö-4x14W	6	4	14	336	4	1200		1	
C3-708	Juvenile Court Trial Hall	Ö-2x18W	12	2	18	432	4	1200		1	
C3-709	Reserve Trial Hall	Ö-4x14W	6	4	14	336	4	1200		1	
C3-709	Reserve Trial Hall	Ö-2x18W	12	2	18	432	4	1200		1	
C3-710	Hall	Ö-1x36W	2	1	36	72					
C3-711	Women Rest Room	Ö-1x36W	2	1	36	72	2	2300			
C3-712	Men Rest Room	Ö-1x36W	4	1	36	144	2	2300			
C3-713	Store	ATY2-4x18W	6	4	18	432	1	300			
C3-714	Electricity	P1-1x36W	1	1	36	36	1	300			
C3-715	Photocopy	P1-1x36W	1	1	36	36	1	300			
C3-716	Store	ATY2-4x18W	6	4	18	432	1	300			

C3 BLOCK	ROOM NAME	LUM TYPES	N	Z	P	L.T.P.	E.S.	E.S.P	TEL	DT	TV
C3-717	Women Rest Room	Ö-1x18W	2	1	18	36	2	2300			
C3-718	Men Rest Room	Ö-1x18W	2	1	18	36	2	2300			
C3-719	Store	ATY2-4x18W	6	4	18	432	1	300			
C3-720	Electricity	P1-1x36W	1	1	36	36	1	300			
C3-721	Servant Room	P1-1x36W	1	1	36	36	1	300			
C3-722	Store	ATY2-4x18W	2	4	18	144	1	300			
C3-723	Corridor	Ö-1x36W	34	1	36	1224	2	600			
C3-724	Juvenile Court Judge Room	Ö-4x14W	3	4	14	168	3	900	1	1	1
C3-725	Juvenile Court Clerical Office	Ö-4x14W	6	4	14	336	8	2400	6	6	
C3-726	Juvenile Court Clerical Office	Ö-4x14W	6	4	14	336	8	2400	6	6	
C3-727	Juvenile Court Judge Room	Ö-4x14W	3	4	14	168	3	900	1	1	1
C3-728	Store	P1-1x36W	1	1	36	36					
C3-729	Room	Ö-4x14W	3	4	14	168	2	600			
C3-730	Fire Security Hall	Ö-1x28W	1	1	28	28					
C3-731	Fire Stairs	Ö-1x28W	2	1	28	56					
C3-732	Store	P1-1x36W	1	1	36	36					
C3-733	Canteen	Ö-1x36W	1	1	36	36	3	900			
C3-734	Women Rest Room	Ö-1x36W	2	1	36	72	2	2300			
C3-735	Men Rest Room	Ö-1x36W	2	1	36	72	2	2300			
C3-736	Juvenile Court Clerical Office	Ö-4x14W	6	4	14	336	8	2400	6	6	
C3-737	Juvenile Court Clerical Office	Ö-4x14W	8	4	14	448	6	1800	7	7	
C3-738	Juvenile Court Judge Room	Ö-4x14W	3	4	14	168	3	900	1	1	1
C3-739	Juvenile Court Judge Room	Ö-4x14W	3	4	14	168	3	900	1	1	1
C3-740	Juvenile Court Clerical Office	Ö-4x14W	6	4	14	336	8	2400	6	6	
C3-741	Juvenile Court Judge Room	Ö-4x14W	3	4	14	168	3	900	1	1	1
C3-742	Juvenile Court Judge Room	Ö-4x14W	3	4	14	168	3	900	1	1	1
C3-743	Juvenile Court Clerical Office	Ö-4x14W	6	4	14	336	8	2400	6	6	
C3-744	Juvenile Court Clerical Office	Ö-4x14W	6	4	14	336	8	2400	6	6	

C3 BLOCK	ROOM NAME	LUM TYPES	N	Z	P	L.T.P.	E.S.	E.S.P	TEL	DT	TV
C3-745	Juvenile Court Judge Room	Ö-4x14W	3	4	14	168	3	900	1	1	1
C3-746	Executing Judgeship Room	Ö-4x14W	3	4	14	168	3	900	1	1	1
C3-747	Executing Judgeship Clerical Office	Ö-4x14W	6	4	14	336	8	2400	6	6	
D1 BLOCK	**ROOM NAME**	**LUM TYPES**	**N**	**Z**	**P**	**L.T.P.**	**E.S.**	**E.S.P**	**TEL**	**DT**	**TV**
D1-701	Main Corridor	ATY2-4x18W	20	4	18	1440	1	300			
D1-701	Main Corridor	Ö-2x18W	6	2	18	216					
D1-702	Electricity	P1-2x36W	2	2	36	144	1	300			
D1-703	Fire Stairs	Ö-1x28W	2	1	28	56					
D1-704	Fire Security Hall	Ö-1x28W	1	1	28	28					
D1-705	Lawyer Resting Room	Ö-4x14W	6	4	14	336	5	1500			1
D1-706	Women Rest Room	Ö-1x36W	4	1	36	144	2	2300			
D1-706	Women Rest Room	T 1X18W	4	1	18	72					
D1-707	Defective Rest Room	Ö-1x36W	1	1	36	36	2	2300			
D1-708	Cleaning Room	P1-1x18W	1	1	18	18					
D1-709	Men Rest Room	Ö-1x36W	6	1	36	216	2	2300			
D1-709	Men Rest Room	T 1X18W	4	1	18	72					
D1-710	Fire Security Hall	Ö-1x28W	1	1	28	28					
D1-711	Fire Stairs	Ö-1x28W	2	1	28	56					
D2 BLOCK	**ROOM NAME**	**LUM TYPES**	**N**	**Z**	**P**	**L.T.P.**	**E.S.**	**E.S.P**	**TEL**	**DT**	**TV**
D2 -701	Corridor	Ö-1x36W	33	1	36	1188	3	900			
D2 -701	Corridor	Ö-2x18W	10	2	18	360					
D2 -702	Public Prosecutor	Ö-4x14W	3	4	14	168	3	900	2	1	1
D2 -703	Public Prosecutor	Ö-4x14W	3	4	14	168	3	900	2	1	1
D2 -704	Public Prosecutor	Ö-4x14W	3	4	14	168	3	900	2	1	1
D2 -705	Public Prosecutor	Ö-4x14W	3	4	14	168	3	900	2	1	1
D2 -706	Public Prosecutor	Ö-4x14W	3	4	14	168	3	900	2	1	1

D2 BLOCK	ROOM NAME	LUM TYPES	N	Z	P	L.T.P.	E.S.	E.S.P	TEL	DT	TV
D2 -707	Public Prosecutor	Ö-4x14W	3	4	14	168	3	900	2	1	1
D2 -708	Public Prosecutor	Ö-4x14W	3	4	14	168	3	900	2	1	1
D2 -709	Public Prosecutor	Ö-4x14W	3	4	14	168	3	900	2	1	1
D2 -710	Public Prosecutor	Ö-4x14W	3	4	14	168	3	900	2	1	1
D2 -711	Public Prosecutor	Ö-4x14W	3	4	14	168	3	900	2	1	1
D2 -712	Public Prosecutor	Ö-4x14W	3	4	14	168	3	900	2	1	1
D2 -713	Public Prosecutor	Ö-4x14W	3	4	14	168	3	900	2	1	1
D2 -714	Public Prosecutor	Ö-4x14W	3	4	14	168	3	900	2	1	1
D2 -715	Public Prosecutor	Ö-4x14W	3	4	14	168	3	900	2	1	1
D2 -716	Public Prosecutor	Ö-4x14W	3	4	14	168	3	900	2	1	1
D2 -717	Elevator Machine House	P1-2x36W	2	2	36	144	1	300			
D2 -718	General Preparation Clerical Office	Ö-4x14W	6	4	14	336	6	1800	5	5	
D2 -719	Servant Room	Ö-1x36W	3	1	36	108	3	900			
D2 -720	Canteen	Ö-1x36W	3	1	36	108	1	300			
D2 -721	Public Prosecutor	Ö-4x14W	4	4	14	224	3	900	2	1	1
D2 -722	Elevator Machine House	P1-2x36W	3	2	36	216	1	300			
D2 -723	Public Prosecutor	Ö-4x14W	4	4	14	224	3	900	2	1	1
D2 -724	Men Rest Room	Ö2-1x36W	3	1	36	108	2	2300			
D2 -725	Women Rest Room	Ö2-1x36W	3	1	36	108	2	2300			
D2 -726	General Preparation Clerical Office	Ö-4x14W	6	4	14	336	6	1800	5	5	
D2 -727	Elevator Machine House	P1-2x36W	3	2	36	216	1	300			
D2 -728	Electricity	P1-2x36W	1	2	36	72	1	300			
D2 -729	Elevator Machine House	P1-2x36W	3	2	36	216	1	300			
D2 -730	General Preparation Clerical Office	Ö-4x14W	9	4	14	504	6	1800	5	5	
D2 -731	Women Rest Room	Ö2-1x36W	3	1	36	108	2	2300			
D2 -732	Men Rest Room	Ö2-1x36W	3	1	36	108	2	2300			
D2 -733	Public Prosecutor	Ö-4x14W	4	4	14	224	3	900	2	1	1
D2 -734	Elevator Machine House	P1-2x36W	3	2	36	216	1	300			

D2 BLOCK	ROOM NAME	LUM TYPES	N	Z	P	L.T.P.	E.S.	E.S.P	TEL	DT	TV
D2 -735	Public Prosecutor	Ö-4x14W	4	4	14	224	3	900	2	1	1
D2 -736	Electricity	Ö2-1x36W	3	1	36	108	1	300			
D2 -737	Canteen	Ö2-1x36W	3	1	36	108	3	900			
D2 -738	Public Prosecutor	Ö-4x14W	4	4	14	224	3	900	2	1	1
D2 -739	Elevator Machine House	P1-2x36W	3	2	36	216	1	300			
D2 -740	Public Prosecutor	Ö-4x14W	4	4	14	224	3	900	2	1	1
D2 -741	Men Rest Room	Ö2-1x36W	3	1	36	108	2	2300			
D2 -742	Women Rest Room	Ö2-1x36W	3	1	36	108	2	2300			
D2 -743	General Preparation Clerical Office	Ö-4x14W	9	4	14	504	6	1800	5	5	
D2 -744	Elevator Machine House	P1-2x36W	3	2	36	216	1	300			
D2 -745	Fire Security Hall	Ö-1x28W	3	1	28	84		0			
D2 -746	Fire Stairs	Ö-1x28W	2	1	28	56		0			
D2 -747	Public Prosecutor	Ö-4x14W	3	4	14	168	3	900	2	1	1
D2 -748	Public Prosecutor	Ö-4x14W	3	4	14	168	3	900	2	1	1
D2 -749	Public Prosecutor	Ö-4x14W	3	4	14	168	3	900	2	1	1
D2 -750	Public Prosecutor	Ö-4x14W	3	4	14	168	3	900	2	1	1
D2 -751	Public Prosecutor	Ö-4x14W	3	4	14	168	3	900	2	1	1
D2 -752	Public Prosecutor	Ö-4x14W	3	4	14	168	3	900	2	1	1
D2 -753	Public Prosecutor	Ö-4x14W	3	4	14	168	3	900	2	1	1
D2 -754	Public Prosecutor	Ö-4x14W	3	4	14	168	3	900	2	1	1
D2 -755	Public Prosecutor	Ö-4x14W	3	4	14	168	3	900	2	1	1
D2 -756	Public Prosecutor	Ö-4x14W	3	4	14	168	3	900	2	1	1
D2 -757	Public Prosecutor	Ö-4x14W	3	4	14	168	3	900	2	1	1
D2 -758	Public Prosecutor	Ö-4x14W	3	4	14	168	3	900	2	1	1
D2 -759	Public Prosecutor	Ö-4x14W	3	4	14	168	3	900	2	1	1
D2 -760	Public Prosecutor	Ö-4x14W	3	4	14	168	3	900	2	1	1
D2 -761	Public Prosecutor	Ö-4x14W	3	4	14	168	3	900	2	1	1
D2 -762	Public Prosecutor	Ö-4x14W	3	4	14	168	3	900	2	1	1

D2 BLOCK	ROOM NAME	LUM TYPES	N	Z	P	L.T.P.	E.S.	E.S.P	TEL	DT	TV
D2 -763	Public Prosecutor	Ö-4x14W	3	4	14	168	3	900	2	1	1
D2 -764	Public Prosecutor	Ö-4x14W	3	4	14	168	3	900	2	1	1
D2 -765	Public Prosecutor	Ö-4x14W	3	4	14	168	3	900	2	1	1
D2 -766	Public Prosecutor	Ö-4x14W	3	4	14	168	3	900	2	1	1
D2 -767	Public Prosecutor	Ö-4x14W	3	4	14	168	3	900	2	1	1
D2 -768	Public Prosecutor	Ö-4x14W	3	4	14	168	3	900	2	1	1
D2 -769	Corridor	Ö-1x36W	46	1	36	1656	2	600			
D3 BLOCK	**ROOM NAME**	**LUM TYPES**	**N**	**Z**	**P**	**L.T.P.**	**E.S.**	**E.S.P**	**TEL**	**DT**	**TV**
D3-701	Floor Hall	ATY2-4x18W	20	4	18	1440	1	300			
D3-701	Floor Hall	Ö-2x26W	41	2	26	2132					
D3-702	Electricity	P1-2x36W	1	2	36	72					
D3-703	Electricity	P1-2x36W	1	2	36	72					
D3-704	Floor Hall	ATY2-4x18W	6	4	18	432					
D3-704	Floor Hall	Ö-2x26W	14	2	26	728					
D3-705	Store	P1-1x36W	1	1	36	36					
D3-706	Store	P1-1x36W	1	1	36	36					
D3-707	Public Prosecutor	Ö-4x14W	3	4	14	168	3	900	2	1	1
D3-708	Public Prosecutor	Ö-4x14W	3	4	14	168	3	900	2	1	1
D3-709	Public Prosecutor	Ö-4x14W	3	4	14	168	3	900	2	1	1
D3-710	Public Prosecutor	Ö-4x14W	3	4	14	168	3	900	2	1	1
D3-711	Public Prosecutor	Ö-4x14W	3	4	14	168	3	900	2	1	1
D3-712	Public Prosecutor	Ö-4x14W	3	4	14	168	3	900	2	1	1
D3-713	Public Prosecutor	Ö-4x14W	3	4	14	168	3	900	2	1	1
D3-714	Public Prosecutor	Ö-4x14W	3	4	14	168	3	900	2	1	1
D3-715	Public Prosecutor	Ö-4x14W	3	4	14	168	3	900	2	1	1
D3-716	Public Prosecutor	Ö-4x14W	3	4	14	168	3	900	2	1	1
D3-717	Public Prosecutor	Ö-4x14W	3	4	14	168	3	900	2	1	1

D3 BLOCK	ROOM NAME	LUM TYPES	N	Z	P	L.T.P.	E.S.	E.S.P	TEL	DT	TV
D3-718	Public Prosecutor	Ö-4x14W	3	4	14	168	3	900	2	1	1
D3-719	Public Prosecutor	Ö-4x14W	3	4	14	168	3	900	2	1	1
D3-720	Public Prosecutor	Ö-4x14W	3	4	14	168	3	900	2	1	1
D3-721	Public Prosecutor	Ö-4x14W	3	4	14	168	3	900	2	1	1
D3-722	Public Prosecutor	Ö-4x14W	3	4	14	168	3	900	2	1	1
D3-723	Public Prosecutor	Ö-4x14W	3	4	14	168	3	900	2	1	1
D3-724	Public Prosecutor	Ö-4x14W	3	4	14	168	3	900	2	1	1
D3-725	Public Prosecutor	Ö-4x14W	3	4	14	168	3	900	2	1	1
D3-726	Public Prosecutor	Ö-4x14W	3	4	14	168	3	900	2	1	1
D3-727	Corridor	Ö-1x36W	43	1	36	1548	4	1200			
D3-728	Fire Stairs	Ö-1x28W	3	1	28	84		0			
D3-729	General Preparation Clerical Office	Ö-4x14W	9	4	14	504	6	1800	5	5	
D3-730	Women Rest Room	Ö2-1x36W	3	1	36	108	2	2300			
D3-731	Men Rest Room	Ö2-1x36W	3	1	36	108	2	2300			
D3-732	Public Prosecutor	Ö-4x14W	3	4	14	168	3	900	2	1	1
D3-733	Public Prosecutor	Ö-4x14W	3	4	14	168	3	900	2	1	1
D3-734	Public Prosecutor	Ö-4x14W	3	4	14	168	3	900	2	1	1
D3-735	Photocopy	Ö2-1x36W	3	1	36	108	2	600			
D3-736	Electricity	Ö2-1x36W	3	1	36	108	1	300			
D3-737	Public Prosecutor	Ö-4x14W	3	4	14	168	3	900	2	1	1
D3-738	Public Prosecutor	Ö-4x14W	3	4	14	168	3	900	2	1	1
D3-739	Public Prosecutor	Ö-4x14W	3	4	14	168	3	900	2	1	1
D3-740	Men Rest Room	Ö2-1x36W	3	1	36	108	2	2300			
D3-741	Women Rest Room	Ö2-1x36W	3	1	36	108	2	2300			
D3-742	General Preparation Clerical Office	Ö-4x14W	9	4	14	504	6	1800	5	5	
D3-743	Corridor	Ö-2x18W	42	2	18	1512					

TABLE					ENTRANCE			LINE				FUSE		POWER	PHASE	INFORMATION		FEEDER N2XH
NAME	POWER			TYPE	FUSE	ELCB		NUM		SOCKET	LIGHT	CURRENT	TYPE					
A1-3BIT-1	65240 W	ILLUM.POWER (W)	5300	M.D.T	3x 100 A MCCB	4x 100 A ELCB (300mA)	4x 25 A ELCB	1	A 1		4	10	MCB	320	S			3x2,5N2XH
								2	A 2		29	3x10	MCB	2320	RST			5x2,5N2XH
								3	A 3		32	3x10	MCB	1420	RST			5x2,5N2XH
								4	A 4		13	10	MCB	520	T			3x2,5N2XH
								5	A 5		4	10	MCB	200	T			3x2,5N2XH
								6	A 6		13	10	MCB	520	S			3x2,5N2XH
								7	P 1	5		16	MCB	1500	R			3x2,5N2XH
								8	O 1			3x25	MCB	6800		A1-3BIT-1.1		5x4/28m
							4x25	9	O 2			3X25	MCB	7840		A1-3BIT-1.2		5x4/25m
								10	O 3			25	MCB	1200		A1-3BIT-1.3		3x6/50m
							4x25	11	O 4			25	MCB	3800		A1-3BIT-1.4		3x6/57m
								12	O 5			25	MCB	360		A1-3BIT-1.5		3x10/70m
							25	13	O 6			3X25	MCB	11500		A1-3BIT-1.6		5x10/80m
							4x25	14	O 7			25	MCB	3380		A1-3BIT-1.7		3x10/95m
								15	O 8			25	MCB	520		A1-3BIT-1.8		3x10/80m
							25	16	O 9			3X25	MCB	9190		A1-3BIT-1.9		5x6/60m
							25	17	O 10			25	MCB	3470		A1-3BIT-1.10		3x6/45m
							4x25	18	O 11			3X25	MCB	7420		A1-3BIT-1.11		5x4/54m
								18	O 11			25	MCB	2960		A1-3BIT-1.12		3x655m
		SOCKET POWER (W)	1500															
TOTAL					65240 W					5	95			65240	R	S	T	RST
															1500	840	750	3740

TABLE					ENTRANCE			LINE				FUSE		POWER	PHASE			INFORMATION	FEEDER N2XH
NAME	POWER			TYPE	FUSE	ELCB		NUM		SOCKET	LIGHT	CURRENT	TYPE						
A1-3BIT-1.1	2250 W	ILLUM.P(W)	1050	M.D.T	20 A MCB			1	A 1		6	10	MCB	420					3x2,5N2XH
								2	A 2		9	10	MCB	630					3x2,5N2XH
								3	P 1	4		16	MCB	1200					3x2,5N2XH
		SOC.P(W)	1200																
TOTAL					2250 W					4	15			2250	R	S	T	RST	
															0	0	0	0	

TABLE					ENTRANCE			LINE				FUSE		POWER	PHASE			INFORMATION	FEEDER N2XH
NAME	POWER			TYPE	FUSE	ELCB		NUM		SOCKET	LIGHT	CURRENT	TYPE						
A1-3BIT-1.2	7840 W	ILLUM.P(W)	6040	M.D.T	3x 20 A MCB		–	1	A 1		9	10	MCB	720	R				3x2,5N2XH
								2	A 2		3	10	MCB	240	R				3x2,5N2XH
								3	A 3		6	10	MCB	480	T				3x2,5N2XH
								4	A 4		6	10	MCB	480	R				3x2,5N2XH
								5	A 5		8	10	MCB	320	T				3x2,5N2XH
								6	A 6		9	10	MCB	360	S				3x2,5N2XH
								7	A 7		38	3x10	MCB	1520	RST				5x2,5N2XH
								8	A 8		48	3x10	MCB	1920	RST				5x2,5N2XH
								9	P 1	3		16	MCB	900	S				3x2,5N2XH
		SOC.P(W)	1800					10	P 2	3		16	MCB	900	T				3x2,5N2XH
							=	11											
								12											
TOTAL					7840 W					6	127			7840	R	S	T	RST	
															1440	1260	1700	3440	

TABLE					ENTRANCE			LINE				FUSE		POWER	PHASE			INFORMATION		FEEDER N2XH
NAME	POWER			TYPE	FUSE	ELCB		NUM		SOCKET	LIGHT	CURRENT	TYPE							
A1-3BIT-1.3	1200 W	ILLUM.P(W)	1200	M.D.T	20 A MCB			1	A 1		12	10	MCB	480						3x2,5N2XH
								2	A 2		10	10	MCB	400						3x2,5N2XH
								3	A 3		8	10	MCB	320						3x2,5N2XH
		SOC.P(W)	0																	
TOTAL					1200 W					0	30			1200	R		S		T	RST
															0		0		0	0

TABLE					ENTRANCE			LINE				FUSE		POWER	PHASE			INFORMATION		FEEDER N2XH
NAME	POWER			TYPE	FUSE	ELCB		NUM		SOCKET	LIGHT	CURRENT	TYPE							
A1-3BIT-1.4	3800 W	ILLUM.P (W)	3200	M.D.T	20 A MCB		I	1	A 1		6	10	MCB	360	S					3x2,5N2XH
								2	A 2		6	10	MCB	360	R					3x2,5N2XH
								3	A 3		6	10	MCB	360	T					3x2,5N2XH
								4	A 4		6	10	MCB	360	R					3x2,5N2XH
								5	A 5		6	10	MCB	360	T					3x2,5N2XH
								6	A 6		6	10	MCB	360	S					3x2,5N2XH
								7	A 7		7	10	MCB	560	S					3x2,5N2XH
								8	A 8		6	10	MCB	480	T					3x2,5N2XH
								9	P 1	2		16	MCB	600	R					3x2,5N2XH
								10												
		SOC.P(W)	600				II	11												
								12												
								13												
								14												
TOPLAM					3800 W					2	49			3800	R		S		T	RST
															1320		1280		1200	0

TABLE					ENTRANCE			LINE				FUSE		POWER	PHASE	INFORMATION		FEEDER N2XH
NAME	POWER			TYPE	FUSE	ELCB		NUM		SOCKET	LIGHT	CURRENT	TYPE					
A1-3BIT-1.5	360 W	ILLUM.P(W)	360	M.D.T	20 A MCB			1	A 1		6	10	MCB	240				3x2,5N2XH
								2	A 2		3	10	MCB	120				3x2,5N2XH
		SOC.P(W)	0															
TOTAL					360 W					0	9			360	R	S	T	RST
															0	0	0	0

TABLE					ENTRANCE			LINE				FUSE		POWER	PHASE	INFORMATION		FEEDER N2XH
NAME	POWER			TYPE	FUSE	ELCB		NUM		SOCKET	LIGHT	CURRENT	TYPE					
A1-3BIT-1.7	3380 W	ILLUM.P(W)	2480	M.D.T	3X 20 A MCB			1	A 1		7	10	MCB	560	S			3x2,5N2XH
								2	A 2		8	10	MCB	640	R			3x2,5N2XH
								3	A 3		8	16	MCB	640	S			3x2,5N2XH
								4	A 4		8	16	MCB	640	R			3x2,5N2XH
								5	P 1	3		16	MCB	900	T			3x2,5N2XH
		SOC.P(W)	900															
TOTAL					3380 W					3	31			3380	R	S	T	RST
															1280	1200	900	0

TABLE					ENTRANCE			LINE				FUSE		POWER	PHASE	INFORMATION		FEEDER N2XH
NAME	POWER			TYPE	FUSE	ELCB		NUM		SOCKET	LIGHT	CURRENT	TYPE					
A1-3BIT-1.6	11500 W	ILLUM.P(W)(W)	7000	M.D.T	3x 20 A MCB		4x 25A ELCB	1	A 1		13	10	MCB	520	R			3x2,5N2XH
								2	A 2		13	10	MCB	520	S			3x2,5N2XH
								3	A 3		13	10	MCB	520	T			3x2,5N2XH
								4	A 4		12	10	MCB	480	R			3x2,5N2XH
								5	A 5		12	10	MCB	480	S			3x2,5N2XH
								6	A 6		9	10	MCB	360	T			3x2,5N2XH
								7	A 7		7	10	MCB	280	R			3x2,5N2XH
								8	A 8		13	10	MCB	520	S			3x2,5N2XH
								9	A 9		13	10	MCB	520	T			3x2,5N2XH
								10	A 10		12	10	MCB	480	R			3x2,5N2XH
		SOCK.P(W)	4500				4x 25A ELCB	11	A 11		12	10	MCB	480	S			3x2,5N2XH
								12	A 12		9	10	MCB	360	T			3x2,5N2XH
								13	A 13		7	10	MCB	280	S			3x2,5N2XH
								14	A 14		10	10	MCB	400	S			3x2,5N2XH
								15	A 15		10	10	MCB	400	T			3x2,5N2XH
								16	A 16		9	10	MCB	360	R			3x2,5N2XH
								17	A 17		2	10	MCB	40	S			3x2,5N2XH
								18	P 1	5		16	MCB	1500	T			3x2,5N2XH
								19	P 2	3		16	MCB	900	T			3x2,5N2XH
								20	P 3	5		16	MCB	1500	T			3x2,5N2XH
								21	P 4	2		16	MCB	600	T			3x2,5N2XH
TOTAL					11500 W					15	176			11500	R	S	T	RST
															2120	2720	6660	0

TABLE					ENTRANCE			LINE				FUSE		POWER	PHASE	INFORMATION		FEEDER N2XH
NAME	POWER			TYPE	FUSE	ELCB		NUM		SOCKET	LIGHT	CURRENT	TYPE					
A1-3BIT-1.8	520 W	ILLUM.P(W)	520	M.D.T	20 A MCB			1	A 1		5	10	MCB	200				3x2,5N2XH
								2	A 2		3	10	MCB	120				3x2,5N2XH
								3	A 3		5	10	MCB	200				3x2,5N2XH
		SOC.P(W)	0															
TOTAL					520 W					0	13			520	R	S	T	RST
															0	0	0	0

TABLE					ENTRANCE			LINE				FUSE		POWER	PHASE	INFORMATION		FEEDER N2XH
NAME	POWER			TYPE	FUSE	ELCB		NUM		SOCKET	LIGHT	CURRENT	TYPE					
A1-3BIT-1.9	9190 W	ILLUM.P(W)	1590	M.D.T	20 A MCB			1	A 1		8	10	MCB	600	R			3x2,5N2XH
								2	A 2		3	10	MCB	280	R			3x2,5N2XH
								3	A 3		7	10	MCB	280	T			3x2,5N2XH
								4	A 4		7	10	MCB	280	R			3x2,5N2XH
								5	A 5		5	10	MCB	150	T			3x2,5N2XH
								6	P 1	4		16	MCB	1200	S			3x2,5N2XH
								7	P 2			16	MCB	2000	S	Hand Dry Machine		3x2,5N2XH
		SOC.P(W)	7600					8	P 3	4		16	MCB	1200	T			3x2,5N2XH
								9	P 4			16	MCB	2000	R	Hand Dry Machine		3x2,5N2XH
								10	P 5	4		16	MCB	1200	T			3x2,5N2XH
TOTAL					9190 W					12	30			9190	R	S	T	RST
															3160	3200	2830	0

TABLE					ENTRANCE			LINE				FUSE		POWER	PHASE	INFORMATION		FEEDER
NAME	POWER			TYPE	FUSE	ELCB		NUM		SOCKET	LIGHT	CURRENT	TYPE					N2XH
A1-3BIT-1.10	3470 W	ILLUM.P(W)	770	M.D.T	20 A MCB			1	A 1		5	10	MCB	350				3x2,5N2XH
								2	A 2		6	10	MCB	420				3x2,5N2XH
								3	P 1	4		16	MCB	1200				3x2,5N2XH
								4	P 2	5		16	MCB	1500				3x2,5N2XH
		SOC.P(W)	2700															
TOTAL					3470 W					9	11			3470	R	S	T	RST
															0	0	0	0

TABLE					ENTRANCE			LINE				FUSE		POWER	PHASE	INFORMATION		FEEDER
NAME	POWER			TYPE	FUSE	ELCB		NUM		SOCKET	LIGHT	CURRENT	TYPE					N2XH
A1-3BIT-1.11	7420 W	ILLUM.P(W)	2920	M.D.T	20 A MCB			1	A 1		5	10	MCB	200	R			3x2,5N2XH
								2	A 2		8	10	MCB	320	S			3x2,5N2XH
								3	A 3		8	10	MCB	320	R			3x2,5N2XH
								4	A 4		8	10	MCB	320	T			3x2,5N2XH
								5	A 5		8	10	MCB	320	T			3x2,5N2XH
								6	A 6		8	10	MCB	320	R			3x2,5N2XH
								7	A 7		8	10	MCB	320	S			3x2,5N2XH
								8	A 8		4	10	MCB	160	S			3x2,5N2XH
								9	A 9		8	10	MCB	640	T			5x2,5N2XH
								10	P 1	5		16	MCB	1500	T			3x2,5N2XH
		SOC.P(W)	4500		3x 20 A MCB			11	P 2	5		16	MCB	1500	S			3x2,5N2XH
								12	P 3	5		16	MCB	1500	R			3x2,5N2XH
TOTAL					7420 W					15	65			7420	R	S	T	RST
															2340	2300	2780	0

TABLE				ENTRANCE			LINE					FUSE		POWER	PHASE			INFORMATION	FEEDER N2XH
NAME	POWER			TYPE	FUSE	ELCB		NUM		SOCKET	LIGHT	CURRENT	TYPE						
A1-3BIT-1.12	2960 W	ILLUM.P(W)	560	M.D.T	20 A MCB			1	A 1		8	10	MCB	560					3x2,5N2XH
								2	P 1	3		16	MCB	900					3x2,5N2XH
								3	P 2	5		16	MCB	1500					3x2,5N2XH
		SOC.P (W)	2400																
TOTAL					2960 W					8	8			2960	R	S	T		RST
															0	0	0		0

TABLE				ENTRANCE			LINE					FUSE		POWER	PHASE			INFORMATION	FEEDER N2XH
NAME	POWER			TYPE	FUSE	ELCB		NUM		SOCKET	LIGHT	CURRENT	TYPE						
A1-3BIT-2	28810 W	ILLUM.P(W)		M.D.T	3x 40 A MCCB	4x 40 A ELCB (300mA)	4x 25 A ELCB	1	A 1		4	10	MCB	320	T				3x2,5N2XH
								2	A 2		29	3X10	MCB	2320	RST				5x2,5N2XH
								3	A 3		32	3X10	MCB	2420	RST				5x2,5N2XH
								4	A 4		13	10	MCB	520	T				3x2,5N2XH
								5	A 5		4	10	MCB	160	T				3x2,5N2XH
								6	A 6		13	10	MCB	520	R				3x2,5N2XH
								7	A 7		4	10	MCB	80	S				3x2,5N2XH
								8	A 8		6	10	MCB	240	R				3x2,5N2XH
								9	A 9		7	10	MCB	140	R				3x2,5N2XH
								10	P 1	5		16	MCB	1500	T				3x2,5N2XH
		SOC.P(W)						11	P 2	1		16	MCB	2000	R			Hand dry machine	3x2,5N2XH
								12	P 3	1		16	MCB	2000	S			Hand dry machine	3x2,5N2XH
								13	P 4	2		16	MCB	600	S				3x2,5N2XH
							4x25	14	O 1			25	MCB	3120				A1-3BIT-2.1	3x4/25m
								15	O 2			25	MCB	3910				A1-3BIT-2.2	3x6/65m
								16	O 3			3X25	MCB	8960				A1-3BIT-2.3	5x10/80m
TOTAL					28810 W					9	112			28810	R	S	T		RST
															2900	2680	2500		4740

TABLE					ENTRANCE			LINE				FUSE		POWER	PHASE	INFORMATION		FEEDER N2XH
NAME	POWER			TYPE	FUSE	ELCB		NUM		SOCKET	LIGHT	CURRENT	TYPE					
A1-3BIT-2.1	3120 W	ILLUM.P(W)	3120	M.D.T	20 A MCB			1	A 1		7	10	MCB	420	R			3x2,5N2XH
								2	A 2		7	10	MCB	420	S			3x2,5N2XH
								3	A 3		6	10	MCB	360	T			3x2,5N2XH
								4	A 4		8	10	MCB	480	R			3x2,5N2XH
								5	A 5		7	10	MCB	420	S			3x2,5N2XH
		SOC.P(W)	0					6	A 6		9	10	MCB	540	T			3x2,5N2XH
								7	A 7		8	10	MCB	480	R			3x2,5N2XH
TOTAL					3120 W					0	52			3120	R	S	T	RST
															1380	840	900	0

TABLE					ENTRANCE			LINE				FUSE		POWER	PHASE	INFORMATION		FEEDER N2XH
NAME	POWER			TYPE	FUSE	ELCB		NUM		SOCKET	LIGHT	CURRENT	TYPE					
A1-3BIT-2.2	3910 W	ILLUM.P(W)	910	M.D.T	20 A MCB			1	A 1		5	10	MCB	350				3x2,5N2XH
								2	A 2		8	10	MCB	560				3x2,5N2XH
								3	P 1	5		16	MCB	1500				3x2,5N2XH
								4	P 2	5		16	MCB	1500				3x2,5N2XH
		SOC.P(W)	3000															
TOTAL					3910 W					10	13			3910	R	S	T	RST
															0	0	0	0

TABLE					ENTRANCE			LINE				FUSE		POWER	PHASE	INFORMATION			FEEDER N2XH
NAME	POWER			TYPE	FUSE	ELCB		NUM		SOCKET	LIGHT	CURRENT	TYPE						
A1-3BIT-2.3	8960 W	ILLUM.P(W)	2560	M.D.T	3x 20 A MCB		I	1	A 1		8	10	MCB	640	S				3x2,5N2XH
								2	A 2		8	10	MCB	640	R				3x2,5N2XH
								3	A 3		4	10	MCB	320	T				3x2,5N2XH
								4	A 4		4	10	MCB	120	R				3x2,5N2XH
								5	A 5		5	10	MCB	200	T				3x2,5N2XH
								6	A 6		8	10	MCB	320	R				3x2,5N2XH
								7	A 7		8	10	MCB	320	S				3x2,5N2XH
		SOC.P(W)	6400					8	P 1	3		16	MCB	900	T				3x2,5N2XH
								9	P 2	3		16	MCB	900	T				3x2,5N2XH
								10	P 3	2		16	MCB	600	T				3x2,5N2XH
							II	11	P 4			16	MCB	2000	S	Hand dry machine			3x2,5N2XH
								12	P 5			16	MCB	2000	R	Hand dry machine			3x2,5N2XH
								13											
TOTAL					8960 W					8	45			8960	R	S	T		RST
															3080	2960	2920		0

TABLE					ENTRANCE			LINE				FUSE		POWER	PHASE	INFORMATION			FEEDER N2XH
NAME	POWER			TYPE	FUSE	ELCB		NUM		SOCKET	LIGHT	CURRENT	TYPE						
B3-3BIT-1	9180 W	ILLUM.P(W)		M.D.T	3x 25 A MCCB	4x25 ELCB (300mA)	4x25 ELCB	1	A 1		6	10	MCB	480	T				3x2,5N2XH
								2	A 2		19	3x10	MCB	1140	RST				5x2,5N2XH
								3	A 3		18	3x10	MCB	1080	RST				5x2,5N2XH
								4	A 4		15	3x10	MCB	900	RST				5x2,5N2XH
								5	A 5			10	MCB			Auxilary			3x2,5N2XH
								6	A 6			10	MCB			Auxilary			3x2,5N2XH
								7	O 1			25	MCB	2100	R	B3-3BIT-1.1			3x4/28m
		SOC.P(W)						8	O 2			25	MCB	3480	S	B3-3BIT-1.2			3x4/35m
TOTAL					9180 W					0	58			9180	R	S	T		RST
															2100	3480	480		3120

TABLE					ENTRANCE			LINE				FUSE		POWER	PHASE			INFORMATION		FEEDER N2XH
NAME	POWER			TYPE	FUSE	ELCB		NUM		SOCKET	LIGHT	CURRENT	TYPE							
B3-3BIT-1.1	2100 W	ILLUM.P(W)	600	M.D.T	20 A MCB			1	A 1		9	10	MCB	600	R					3x2,5N2XH
								2	P 1	5		16	MCB	1500	R					3x2,5N2XH
		SOC.P(W)	1500																	
TOTAL					2100 W					5	9			2100	R		S		T	RST
															2100		0		0	0

TABLE					ENTRANCE			LINE				FUSE		POWER	PHASE			INFORMATION		FEEDER N2XH
NAME	POWER			TYPE	FUSE	ELCB		NUM		SOCKET	LIGHT	CURRENT	TYPE							
B3-3BIT-1.2	3480 W	ILLUM.P(W)	3480	M.D.T	20 A MCB			1	A 1		12	10	MCB	720	S					3x2,5N2XH
								2	A 2		18	10	MCB	1080	S					3x2,5N2XH
								3	A 3		14	10	MCB	840	S					3x2,5N2XH
								4	A 4		14	10	MCB	840	S					3x2,5N2XH
		SOC.P(W)	0																	
TOTAL					3480 W					0	58			3480	R		S		T	RST
															0		3480		0	0

TABLE					ENTRANCE			LINE				FUSE		POWER	PHASE	INFORMATION		FEEDER N2XH
NAME	POWER			TYPE	FUSE	ELCB		NUM		SOCKET	LIGHT	CURRENT	TYPE					
B2-3BIT-2	17380 W	ILLUM.P(W)	240	M.D.T	25 A MCCB	4x25AELCB (300mA)	4x25 ELCB	1	A 1		5	10	MCB	240	T			3x2,5N2XH
								2	A 2			10	MCB			Auxilary		3x2,5N2XH
								3	P 1	1		16	MCB	600	R			3x2,5N2XH
								4	P 2			16	MCB			Auxilary		3x2,5N2XH
								5	O 1			3x25	MCB	9940	RST	B2-3BIT-2.1		5x4/27m
		SOC.P(W)	600				4x25 ELCB	6	O 2			3x25	MCB	6600	RST	B2-3BIT-2.2		5x4/20m
TOTAL					17380 W					1	5			17380	R	S	T	RST
															600	0	240	16540

TABLE					ENTRANCE			LINE				FUSE		POWER	PHASE	INFORMATION		FEEDER N2XH
NAME	POWER			TYPE	FUSE	ELCB		NUM		SOCKET	LIGHT	CURRENT	TYPE					
B2-3BIT-2.1	10340 W	ILLUM.P(W)	1340	M.D.T	20 A MCB	4x 25A ELCB		1	A 1		6	10	MCB	420	R			3x2,5N2XH
								2	A 2		6	10	MCB	240	R			3x2,5N2XH
								3	A 3		9	10	MCB	180	T			3x2,5N2XH
								4	A 4		6	10	MCB	220	R			3x2,5N2XH
								5	A 5		7	10	MCB	280	T			3x2,5N2XH
								6	A 6			10	MCB			Auxilary		3x2,5N2XH
								7	P 1	5		16	MCB	1500	S			3x2,5N2XH
		SOC.P(W)	9000					8	P 2	3		16	MCB	900	T			3x2,5N2XH
								9	P 3			16	MCB	2000	R	Hand dry machine		3x2,5N2XH
								10	P 4			16	MCB	2000	T	Hand dry machine		3x2,5N2XH
					3x			11	P 5			16	MCB	2000	S	Hand dry machine		3x2,5N2XH
								12	P 6	2		16	MCB	600	R			3x2,5N2XH
								13										
TOTAL					10340 W					10	34			10340	R	S	T	RST
															2880	3500	3360	0

TABLE					ENTRANCE			LINE				FUSE		POWER	PHASE	INFORMATION		FEEDER
NAME	POWER			TYPE	FUSE	ELCB		NUM		SOCKET	LIGHT	CURRENT	TYPE					N2XH
B2-3BIT-2.2	6600 W	ILLUM.P(W)	5400	M.D.T	3x 20 A MCB	4x 25A ELCB	I	1	A 1		8	10	MCB	560	S			3x2,5N2XH
								2	A 2		13	10	MCB	780	S			3x2,5N2XH
								3	A 3		10	10	MCB	800	T			3x2,5N2XH
								4	A 4		13	10	MCB	780	R			3x2,5N2XH
								5	A 5		17	3x10	MCB	1020	RST			5x2,5N2XH
								6	A 6		6	10	MCB	360	T			3x2,5N2XH
								7	A 7		5	10	MCB	300	T			3x2,5N2XH
		SOC.P(W)	900					8	A 8		10	10	MCB	800	S			3x2,5N2XH
								9	P 1	3		16	MCB	900	R			3x2,5N2XH
								10	P 2			16	MCB		R			3x2,5N2XH
							II	11	F 1	3		16	MCB	300	S			3x2,5N2XH
								12										
								13										
								14										
								15										
TOTAL					6600 W					6	82			6600	R	S	T	RST
															1680	2440	1460	1020

TABLE					ENTRANCE			LINE					FUSE		POWER	PHASE			INFORMATION	FEEDER N2XH
NAME	POWER			TYPE	FUSE	ELCB		NUM		SOCKET	LIGHT	CURRENT	TYPE							
C1-3BIT-1	46090 W	ILLUMINATION.P(W)		M.D.T	3x 63 A MCCB	4x 63A ELCB (300mA)	4x 25A ELCB	1	A 1		2	10	MCB	120	R					3x2,5N2XH
								2	A 2		5	10	MCB	200	S					3x2,5N2XH
								3	A 3		6	10	MCB	480	T					3x2,5N2XH
								4	A 4		6	10	MCB	480	R					3x2,5N2XH
								5	A 5		6	10	MCB	240	S					3x2,5N2XH
								6	A 6		27	3X10	MCB	1080	RST					5x2,5N2XH
								7	A 7		8	10	MCB	640	S					3x2,5N2XH
								8	A 8		6	10	MCB	240	S					3x2,5N2XH
								9	A 9		6	10	MCB	480	T					3x2,5N2XH
								10	A 10		4	10	MCB	160	R					3x2,5N2XH
								11	A 11		8	10	MCB	320	S					3x2,5N2XH
								12	A 12		13	3X10	MCB	520	RST					5x2,5N2XH
								13	A 13		6	10	MCB	240	S					3x2,5N2XH
								14	A 14		7	10	MCB	400	S					3x2,5N2XH
								15	A 15		6	10	MCB	240	R					3x2,5N2XH
								16	P 1	3		16	MCB	900	R					3x2,5N2XH
								17	P 2	5		16	MCB	1500	S					3x2,5N2XH
								18	P 3	1		16	MCB	2000	R					3x2,5N2XH
								19	P 4	2		16	MCB	600	T					3x2,5N2XH
								20	P 5	1		16	MCB	2000	T					3x2,5N2XH
		SOCKET.P(W)					4x 25A ELCB	21	O 1			25	MCB	1110	R			C1-3BIT-1.1		3x4/45m
								22	O 2			25	MCB	1110	S			C1-3BIT-1.2		3x4/43m
								23	O 3			25	MCB	1110	T			C1-3BIT-1.3		3x4/40m
								24	O 4			25	MCB	1110	R			C1-3BIT-1.4		3x4/37m
								25	O 5			25	MCB	1110	S			C1-3BIT-1.5		3x4/34m
								26	O 6			25	MCB	1110	T			C1-3BIT-1.6		3x4/31m
							4x25	27	O 7			3X25	MCB	8000	RST			C1-3BIT-1.7		5x4/8m
								28	O 8			25	MCB	1410	R			C1-3BIT-1.8		3x4/25m
							4x25	29	O 9			25	MCB	1110	S			C1-3BIT-1.9		3x4/28m
								30	O 10			3x25	MCB	4760	RST			C1-3BIT-1.10		5x4/15m
							4x 25A	31	O 11			25	MCB	3450	T			C1-3BIT-1.11		3x4/35m
								32	O 12			25	MCB	1620	S			C1-3BIT-1.12		3x4/22m
								33	O 13			3x25	MCB	6240	RST			C1-3BIT-1.13		5x4/46m
TOTAL					46090 W					12	116			46090	R		S		T	RST
															7530		8730		9230	20600

TABLE					ENTRANCE			LINE				FUSE		POWER	PHASE	INFORMATION		FEEDER N2XH
NAME	POWER			TYPE	FUSE	ELCB		NUM		SOCKET	LIGHT	CURRENT	TYPE					
	1110 W	ILLUM.P(W)	210	M.D.T	20 A MCB			1	A 1		3	10	MCB	210				3x2,5N2XH
								2	P 1	3		16	MCB	900				3x2,5N2XH
		SOC.P(W)	900															
TOTAL					1110 W					3	3			1110	R	S	T	RST
															0	0	0	0
C1-3BIT-1.1/C1-3BIT-1.2/C1-3BIT-1.3/C1-3BIT-1.4/C1-3BIT-1.5/C1-3BIT-1.6																		

TABLE					ENTRANCE			LINE				FUSE		POWER	PHASE	INFORMATION		FEEDER N2XH
NAME	POWER			TYPE	FUSE	ELCB		NUM		SOCKET	LIGHT	CURRENT	TYPE					
C1-3BIT-1.7	8000 W	ILLUM.P(W)	1400	M.D.T	3x 20 A MCB			1	A 1		6	10	MCB	420	T			3x2,5N2XH
								2	A 2		8	10	MCB	560	R			3x2,5N2XH
								3	A 3		6	10	MCB	420	R			3x2,5N2XH
								4	P 1	4		16	MCB	1200	S			3x2,5N2XH
								5	P 2	3		16	MCB	900	R			3x2,5N2XH
								6	P 3	4		16	MCB	1200	T			3x2,5N2XH
								7	P 4	5		16	MCB	1500	S			3x2,5N2XH
		SOC.P(W)	6600					8	P 5	3		16	MCB	900	T			3x2,5N2XH
								9	P 6	3		16	MCB	900	R			3x2,5N2XH
TOTAL					8000 W					22	20			8000	R	S	T	RST
															2780	2700	2520	0

TABLE					ENTRANCE			LINE				FUSE		POWER	PHASE	INFORMATION		FEEDER N2XH
NAME	POWER			TYPE	FUSE	ELCB		NUM		SOCKET	LIGHT	CURRENT	TYPE					
C1-3BIT-1.8	1410 W	ILLUM.P(W)	210	M.D.T	20 A MCB			1	A 1		3	10	MCB	210	R			3x2,5N2XH
								2	P 1	4		16	MCB	1200	R			3x2,5N2XH
		SOC.P(W)	1200															
TOTAL					1410 W					4	3			1410	R	S	T	RST
															1410	0	0	0

TABLE					ENTRANCE			LINE				FUSE		POWER	PHASE	INFORMATION		FEEDER N2XH
NAME	POWER			TYPE	FUSE	ELCB		NUM		SOCKET	LIGHT	CURRENT	TYPE					
C1-3BIT-1.9	1110 W	ILLUM.P(W)	210	M.D.T	20 A MCB			1	A 1		3	10	MCB	210	S			3x2,5N2XH
								2	P 1	3		16	MCB	900	S			3x2,5N2XH
		SOC.P(W)	900															
TOTAL					1110 W					3	3			1110	R	S	T	RST
															0	1110	0	0

TABLE					ENTRANCE			LINE				FUSE		POWER	PHASE	INFORMATION		FEEDER N2XH
NAME	POWER			TYPE	FUSE	ELCB		NUM		SOCKET	LIGHT	CURRENT	TYPE					
C1-3BIT.1.10	4760 W	ILLUM.P(W)	560	M.D.T	20 A MCB			1	A 1		4	10	MCB	280	S			3x2,5N2XH
								2	A 2		4	10	MCB	280	R			3x2,5N2XH
								3	P 1	4		16	MCB	1200	T			3x2,5N2XH
								4	P 2	3		16	MCB	900	R			3x2,5N2XH
								5	P 3	4		16	MCB	1200	S			3x2,5N2XH
		SOC.P(W)	4200					6	P 4	3		16	MCB	900	R			3x2,5N2XH
TOTAL					4760 W					14	8			4760	R	S	T	RST
															2080	1480	1200	0

TABLE					ENTRANCE			LINE				FUSE		POWER	PHASE	INFORMATION		FEEDER N2XH
NAME	POWER			TYPE	FUSE	ELCB		NUM		SOCKET	LIGHT	CURRENT	TYPE					
C1-3BIT-1.11	3450 W	ILLUM.P(W)	1050	M.D.T	20 A MCB			1	A 1		9	10	MCB	630	T			3x2,5N2XH
								2	A 2		5	10	MCB	200	S			3x2,5N2XH
								3	A 3		3	10	MCB	220	T			3x2,5N2XH
								4	P 1	3		16	MCB	900	S			3x2,5N2XH
								5	P 2	5		16	MCB	1500	R			3x2,5N2XH
		SOC.P(W)	2400															
TOTAL					3450 W					8	17			3450	R	S	T	RST
															1500	1100	850	0

TABLE					ENTRANCE			LINE				FUSE		POWER	PHASE	INFORMATION		FEEDER N2XH
NAME	POWER			TYPE	FUSE	ELCB		NUM		SOCKET	LIGHT	CURRENT	TYPE					
C1-3BIT-1.12	1620 W	ILLUM.P(W)	420	M.D.T	20 A MCB			1	A 1		6	10	MCB	420	S			3x2,5N2XH
								2	P 1	4		16	MCB	1200	S			3x2,5N2XH
		SOC.P(W)	1200															
TOTAL					1620 W					4	6			1620	R	S	T	RST
															0	1620	0	0

TABLE					ENTRANCE			LINE				FUSE		POWER	PHASE	INFORMATION		FEEDER N2XH
NAME	POWER			TYPE	FUSE	ELCB		NUM		SOCKET	LIGHT	CURRENT	TYPE					
C1-3BIT-1.13	6240 W	ILLUM.P(W)	740	M.D.T	20 A MCB			1	A 1		7	10	MCB	280	R			3x2,5N2XH
								2	A 2		4	10	MCB	460	T			3x2,5N2XH
								3	P 1	5		16	MCB	1500	T			3x2,5N2XH
								4	P 2			16	MCB	2000	R	Hand dry machine		3x2,5N2XH
								5	P 3			16	MCB	2000	S	Hand dry machine		3x2,5N2XH
		SOC.P(W)	5500															
TOTAL					6240 W					5	11			6240	R	S	T	RST
															2280	2000	1960	0

TABLE					ENTRANCE			LINE				FUSE							
NAME	POWER			TYPE	FUSE	ELCB		NUM		SOCKET	LIGHT	CURRENT	TYPE	POWER	PHASE	INFORMATION		FEEDER N2XH
C1-3BIT-2	34280 W	ILLUM.P(W)		M.D.T	3x 50 A MCCB	4x 50A ELCB (300mA)	4x 25A ELCB	1	A 1		8	10	MCB	120	R			3x2,5N2XH
								2	A 2		31	3X10	MCB	1240	RST			5x2,5N2XH
								3	A 3		4	10	MCB	160	T			3x2,5N2XH
								4	A 4		6	10	MCB	480	R			3x2,5N2XH
								5	A 5		6	10	MCB	480	S			3x2,5N2XH
								6	A 6		6	10	MCB	240	S			3x2,5N2XH
								7	A 7		8	10	MCB	320	R			3x2,5N2XH
								8	A 8		8	10	MCB	320	S			3x2,5N2XH
								9	A 9		6	10	MCB	240	T			3x2,5N2XH
								10	A 10		36	3X10	MCB	1440	RST			5x2,5N2XH
		SOC.P(W)						11	P 1	3		16	MCB	900	S			3x2,5N2XH
								12	P 2	4		16	MCB	1200	T			3x2,5N2XH
								13	P 3	2		16	MCB	600	R			3x2,5N2XH
								14	P 4	1		16	MCB	2000	S			3x2,5N2XH
								15	P 5	1		16	MCB	2000	T			3x2,5N2XH
							4x25	16	O 1			25	MCB	1110	R	C1-3BIT-2.1		3x4/8m
								17	O 2			25	MCB	1110	S	C1-3BIT-2.2		3x4/12m
								18	O 3			25	MCB	3930	R	C1-3BIT-2.3		3x4/15m
								19	O 4			25	MCB	2520	T	C1-3BIT-2.4		3x4/18m
							4x 25A ELCB	20	O 5			25	MCB	1110	S	C1-3BIT-2.5		3x4/15m
								21	O 6			25	MCB	1110	T	C1-3BIT-2.6		3x4/25m
								22	O 7			25	MCB	1110	R	C1-3BIT-2.7		3x4/28m
								23	O 8			25	MCB	1020	S	C1-3BIT-2.8		3x4/31m
								24	O 9			3x25	MCB	4760	RST	C3-3BIT-2.9		5x4/20m
								25	O 10			3x25	MCB	4760	RST	C3-3BIT-2.10		5x4/25m
TOTAL					34280 W					11	119			34280	R	S	T	RST
															7670	7180	7230	12200

TABLE					ENTRANCE			LINE				FUSE		POWER	PHASE		INFORMATION		FEEDER N2XH
NAME	POWER			TYPE	FUSE	ELCB		NUM		SOCKET	LIGHT	CURRENT	TYPE						
	1110 W	ILLIM.P(W)	210	M.D.T	20 A MCB			1	A 1		3	10	MCB	210					3x2,5N2XH
								2	P 1	3		16	MCB	900					3x2,5N2XH
		SOC.P(W)	900																
TOTAL					1110 W					3	3			1110	R		S	T	RST
															0		0	0	0
C1-3BIT-2.1/C1-3BIT-2.2/C1-3BIT-2.5/C1-3BIT-2.6/C1-3BIT-2.7																			

TABLE					ENTRANCE			LINE				FUSE		POWER	PHASE		INFORMATION		FEEDER N2XH
NAME	POWER			TYPE	FUSE	ELCB		NUM		SOCKET	LIGHT	CURRENT	TYPE						
C1-3BIT-2.3	3930 W	ILLUM.P(W)	630	M.D.T	20 A MCB			1	A 1		6	10	MCB	420	R				3x2,5N2XH
								2	A 2		3	10	MCB	210	R				3x2,5N2XH
								3	P 1	3		16	MCB	900	R				3x2,5N2XH
								4	P 2	4		16	MCB	1200	R				3x2,5N2XH
								5	P 3	4		16	MCB	1200	R				3x2,5N2XH
		SOC.P(W)	3300																
TOTAL					3930 W					11	9			3930	R		S	T	RST
															3930		0	0	0

TABLE					ENTRANCE			LINE				FUSE		POWER	PHASE			INFORMATION		FEEDER N2XH
NAME	POWER			TYPE	FUSE	ELCB		NUM		SOCKET	LIGHT	CURRENT	TYPE							
C1-3BIT-2.4	2520 W	ILLUM.P(W)	420	M.D.T	20 A MCB			1	A 1		6	10	MCB	420	T					3x2,5N2XH
								2	P 1	3		16	MCB	900	T					3x2,5N2XH
								2	P 2	4		16	MCB	1200	T					3x2,5N2XH
		SOC.P(W)	2100																	
TOTAL					2520 W					7	6			2520	R		S		T	RST
															0		0		2520	0

TABLE					ENTRANCE			LINE				FUSE		POWER	PHASE			INFORMATION		FEEDER N2XH
NAME	POWER			TYPE	FUSE	ELCB		NUM		SOCKET	LIGHT	CURRENT	TYPE							
C1-3BIT-2.8	1020 W	ILLUM.P(W)	420	M.D.T	20 A MCB			1	A 1		6	10	MCB	420	S					3x2,5N2XH
								2	P 1	2		16	MCB	600	S					3x2,5N2XH
		SOC.P(W)	600																	
TOTAL					1020 W					2	6			1020	R		S		T	RST
															0		1020		0	0

TABLE					ENTRANCE			LINE				FUSE		POWER	PHASE	INFORMATION		FEEDER
NAME	POWER			TYPE	FUSE	ELCB		NUM		SOCKET	LIGHT	CURRENT	TYPE					N2XH
	4760 W	ILLUM.P(W)	560	M.D.T	3X20 A MCB			1	A 1		4	10	MCB	280	T			3x2,5N2XH
								2	A 2		4	10	MCB	280	S			3x2,5N2XH
								3	P 1	4		16	MCB	1200	T			3x2,5N2XH
								4	P 2	3		16	MCB	900	R			3x2,5N2XH
								5	P 3	4		16	MCB	1200	S			3x2,5N2XH
		SOC.P(W)	4200					6	P 4	3		16	MCB	900	R			3x2,5N2XH
TOTAL					4760 W					14	8			4760	R	S	T	RST
															1800	1480	1480	0

C1-3BIT-2.9/C1-3BIT-2.10/

TABLE					ENTRANCE			LINE				FUSE						
NAME	POWER			TYPE	FUSE	ELCB		NUM		SOCKET	LIGHT	CURRENT	TYPE	POWER	PHASE	INFORMATION		FEEDER N2XH
C3-3BIT-1	43970 W	ILLUM.P(W)		M.D.T	3x 63 A MCCB	4x 63A ELCB	4x 25A ELCB	1	A 1		2	10	MCB	120	R			3x2,5N2XH
								2	A 2		5	10	MCB	200	S			3x2,5N2XH
								3	A 3		6	10	MCB	480	T			3x2,5N2XH
								4	A 4		6	10	MCB	480	S			3x2,5N2XH
								5	A 5		26	3X10	MCB	1040	RST			5x2,5N2XH
								6	A 6		8	10	MCB	640	T			3x2,5N2XH
								7	A 7		6	10	MCB	240	R			3x2,5N2XH
								8	A 8		6	10	MCB	480	S			3x2,5N2XH
								9	A 9		4	10	MCB	160	T			3x2,5N2XH
								10	A 10		8	10	MCB	320	T			3x2,5N2XH
							ELCB	11	A 11		12	3X10	MCB	480	RST			5x2,5N2XH
								12	A 12		7	10	MCB	280	T			3x2,5N2XH
								13	A 13		4	10	MCB	320	S			3x2,5N2XH
		SOC.P(W)					4x 25A	14	P 1	3		16	MCB	900	S			3x2,5N2XH
								15	P 2	5		16	MCB	1500	T			3x2,5N2XH
								16	P 3	2		16	MCB	600	R			3x2,5N2XH
								17	P 4	2		16	MCB	600	S			3x2,5N2XH
								18	P 5	1		16	MCB	2000	T	Hand dry machine		3x2,5N2XH
								19	P 6	1		16	MCB	2000	T	Hand dry machine		3x2,5N2XH
							4x25	20	O 1			25	MCB	2290	R	C3-3BIT-1.1		3x4/40m
								21	O 2			25	MCB	2220	S	C3-3BIT-1.2		3x4/34m
								22	O 3			25	MCB	2220	R	C3-3BIT-1.3		3x4/28m
								23	O 4			25	MCB	2060	R	C3-3BIT-1.4		3x4/22m
							4x2	24	O 5			3x25	MCB	6890	S	C3-3BIT-1.5		5x4/8m
								25	O 6			3x25	MCB	6450	T	C3-3BIT-1.6		5x4/20m
							4x25	26	O 7			3x25	MCB	5940	R	C3-3BIT-1.7		5x4/46m
								27	O 8			25	MCB	1020	S	C3-3BIT-1.S1		3x4/32m
								28	O 9			25	MCB	1020	S	C3-3BIT-1.S2		3x4/38m
								29	O 10			25	MCB	1020	R	C3-3BIT-1.S3		3x4/44m
TOTAL					43970 W					14	100			43970	R	S	T	RST
															14490	14130	13380	1520

TABLE					ENTRANCE			LINE				FUSE		POWER	PHASE	INFORMATION		FEEDER N2XH
NAME	POWER			TYPE	FUSE	ELCB		NUM		SOCKET	LIGHT	CURRENT	TYPE					
C3-3BIT-1.1	2290 W	ILLUM.P(W)	490	M.D.T	20 A MCB			1	A 1		7	10	MCB	490	R			3x2,5N2XH
								2	P 1	3		16	MCB	900	R			3x2,5N2XH
								3	P 2	3		16	MCB	900	R			3x2,5N2XH
		SOC.P(W)	1800															
TOTAL					2290 W					6	7			2290	R	S	T	RST
															2290	0	0	0

TABLE					ENTRANCE			LINE				FUSE		POWER	PHASE	INFORMATION		FEEDER N2XH
NAME	POWER			TYPE	FUSE	ELCB		NUM		SOCKET	LIGHT	CURRENT	TYPE					
	2220 W	ILLUM.P(W)	420	M.D.T	20 A MCB			1	A 1		6	10	MCB	420	R			3x2,5N2XH
								2	P 1	3		16	MCB	900	R			3x2,5N2XH
								3	P 2	3		16	MCB	900	R			3x2,5N2XH
		SOC.P(W)	1800															
TOTAL					2220 W					6	6			2220	R	S	T	RST
															2220	0	0	0

C3-3BIT-1.3/C3-3BIT-1.2

TABLE					ENTRANCE			LINE				FUSE		POWER	PHASE	INFORMATION		FEEDER N2XH
NAME	POWER			TYPE	FUSE	ELCB		NUM		SOCKET	LIGHT	CURRENT	TYPE					
C3-3BIT-1.4	2060 W	ILLUM.P(W)	560	M.D.T	20 A MCB			1	A 1		8	10	MCB	560	R			3x2,5N2XH
								2	P 1	5		16	MCB	1500	R			3x2,5N2XH
		SOC.P(W)	1500															
TOTAL					2060 W					5	8			2060	R	S	T	RST
															2060	0	0	0

TABLE					ENTRANCE			LINE				FUSE		POWER	PHASE	INFORMATION		FEEDER N2XH
NAME	POWER			TYPE	FUSE	ELCB		NUM		SOCKET	LIGHT	CURRENT	TYPE					
C3-3BIT-1.5	6890 W	ILLUM.P(W)	1190	M.D.T	20 A MCB			1	A 1		6	10	MCB	420	R			3x2,5N2XH
								2	A 2		8	10	MCB	560	R			3x2,5N2XH
								3	A 3		3	10	MCB	210	S			3x2,5N2XH
								4	P 1	4		16	MCB	1200	S			3x2,5N2XH
								5	P 2	3		16	MCB	900	S			3x2,5N2XH
								6	P 3	4		16	MCB	1200	T			3x2,5N2XH
		SOC.P(W)	5700					7	P 4	5		16	MCB	1500	R			3x2,5N2XH
								8	P 5	3		16	MCB	900	T			3x2,5N2XH
					3x													
TOTAL					6890 W					19	17			6890	R	S	T	RST
															2480	2310	2100	0

TABLE					ENTRANCE			LINE				FUSE		POWER	PHASE	INFORMATION		FEEDER N2XH
NAME	POWER			TYPE	FUSE	ELCB		NUM		SOCKET	LIGHT	CURRENT	TYPE					
C3-3BIT-1.6	6450 W	ILLUM.P(W)	1050	M.D.T	3x 20 A MCB			1	A 1		9	10	MCB	630	T			3x2,5N2XH
								2	A 2		6	10	MCB	420	S			3x2,5N2XH
								3	P 1	4		16	MCB	1200	T			3x2,5N2XH
								4	P 2	4		16	MCB	1200	R			3x2,5N2XH
								5	P 3	4		16	MCB	1200	R			3x2,5N2XH
		SOC.P(W)	5400					6	P 4	6		16	MCB	1800	S			3x2,5N2XH
TOTAL					6450 W					18	15			6450	R	S	T	RST
															2400	2220	1830	0

TABLE					ENTRANCE			LINE				FUSE		POWER	PHASE	INFORMATION		FEEDER N2XH
NAME	POWER			TYPE	FUSE	ELCB		NUM		SOCKET	LIGHT	CURRENT	TYPE					
C3-3BIT-1.7	5940 W	ILLUM.P(W)	440	M.D.T	3x 20 A MCB			1	A 1		7	10	MCB	280	T			3x2,5N2XH
								2	A 2		4	10	MCB	160	R			3x2,5N2XH
								3	P 1	5		16	MCB	1500	T			3x2,5N2XH
								4	P 2			16	MCB	2000	S	Hand dry machine		3x2,5N2XH
								5	P 3			16	MCB	2000	R	Hand dry machine		3x2,5N2XH
		SOC.P(W)	5500															
TOTAL					5940 W					5	11			5940	R	S	T	RST
															2160	2000	1780	0

TABLE					ENTRANCE			LINE				FUSE							
NAME	POWER			TYPE	FUSE	ELCB		NUM		SOCKET	LIGHT	CURRENT	TYPE	POWER	PHASE	INFORMATION		FEEDER N2XH
	1020 W	ILLUM.P(W)	420	M.D.T	20 A MCB			1	A 1		6	10	MCB	420				3x2,5N2XH
		SOC.P(W)	600					2	P 1	2		16	MCB	600				3x2,5N2XH
TOTAL					1020 W					2	6			1020	R	S	T	RST
															0	0	0	0

C3-3BIT-1.8/C3-3BIT-1.9/C3-3BIT-1.10

TABLE					ENTRANCE			LINE				FUSE		POWER	PHASE	INFORMATION		FEEDER N2XH
NAME	POWER			TYPE	FUSE	ELCB		NUM		SOCKET	LIGHT	CURRENT	TYPE					
C3-3BIT-2	32020 W	ILLUMINATION.P(W)		M.D.T	3x 50 A MCCB	4x 50A ELCB (300mA)	4x 25A ELCB	1	A 1		2	10	MCB	120	S			3x2,5N2XH
								2	A 2		31	3X10	MCB	1240	RST			5x2,5N2XH
								3	A 3		5	10	MCB	200	S			3x2,5N2XH
								4	A 4		6	10	MCB	480	R			3x2,5N2XH
								5	A 5		6	10	MCB	480	R			3x2,5N2XH
								6	A 6		8	10	MCB	320	R			3x2,5N2XH
								7	A 7		10	10	MCB	400	T			3x2,5N2XH
								8	A 8		6	10	MCB	240	T			3x2,5N2XH
								9	A 9		36	3X10	MCB	1440	RST			5x2,5N2XH
								10	P 1	3		16	MCB	900	T			3x2,5N2XH
								11	P 2	4		16	MCB	1200	T			3x2,5N2XH
								12	P 3	2		16	MCB	600	S			3x2,5N2XH
								13	P 4	1		16	MCB	2000	R			3x2,5N2XH
								14	P 5	1		16	MCB	2000	S			3x2,5N2XH
		SOCKET.P(W)					4x 25A ELCB	15	O 1			3x25	MCB	5550	R	C3-3BIT-2.1		5x4/8m
								16	O 2			25	MCB	1110	S	C3-3BIT-2.2		3x4/8m
								17	O 3			25	MCB	1110	T	C3-3BIT-2.3		3x4/11m
								18	O 4			25	MCB	1110	S	C3-3BIT-2.4		3x4/14m
								19	O 5			25	MCB	1110	S	C3-3BIT-2.5		3x4/17m
								20	O 6			25	MCB	1110	T	C3-3BIT-2.6		3x4/20m
								21	O 7			25	MCB	1110	T	C3-3BIT-2.7		3x4/23m
							4x25	22	O 8			3x25	MCB	5130	S	C3-3BIT-2.8		5x4/15m
								23	O 9			25	MCB	1020	S	C3-3BIT-2.S1		3x4/32m
							4x 25A ELCB	24	O 10			25	MCB	1020	T	C3-3BIT-2.S2		3x4/38m
								25	O 11			25	MCB	1020	T	C3-3BIT-2.S3		3x4/44m
TOTAL					32020 W					11	110			32020	R	S	T	RST
															8830	12400	8110	2680

TABLE					ENTRANCE			LINE				FUSE							
NAME	POWER			TYPE	FUSE	ELCB		NUM		SOCKET	LIGHT	CURRENT	TYPE	POWER	PHASE	INFORMATION			FEEDER N2XH
C3-3BIT-2.1	5550 W	ILLUM.P(W)	1050	M.D.T	3x 20 A MCB			1	A 1		9	10	MCB	630	T				3x2,5N2XH
								2	A 2		6	10	MCB	420	T				3x2,5N2XH
								3	P 1	3		16	MCB	900	R				3x2,5N2XH
								4	P 2	3		16	MCB	900	T				3x2,5N2XH
								5	P 3	3		16	MCB	900	S				3x2,5N2XH
								6	P 4	3		16	MCB	900	R				3x2,5N2XH
		SOC.P(w)	4500					7	P 5	3		16	MCB	900	S				3x2,5N2XH
TOTAL					5550 W					15	15			5550	R	S	T		RST
															1800	1800	1950		0

TABLE					ENTRANCE			LINE				FUSE							
NAME	POWER			TYPE	FUSE	ELCB		NUM		SOCKET	LIGHT	CURRENT	TYPE	POWER	PHASE	INFORMATION			FEEDER N2XH
	1110 W	ILLUM.P(W)	210	M.D.T	20 A MCB			1	A 1		3	10	MCB	210					3x2,5N2XH
								2	P 1	3		16	MCB	900					3x2,5N2XH
		SOC.P(W)	900																
TOTAL					1110 W					3	3			1110	R	S	T		RST
															0	0	0		0

C3-3BIT-2.7/C3-3BIT-2.6/C3-3BIT-2.5/C3-3BIT-2.4/C3-3BIT-2.3/C3-3BIT-2.2

TABLE					ENTRANCE			LINE				FUSE		POWER	PHASE	INFORMATION		FEEDER N2XH
NAME	POWER			TYPE	FUSE	ELCB		NUM		SOCKET	LIGHT	CURRENT	TYPE					
C3-3BIT-2.8	5130 W	ILLUM.P(W)	930	M.D.T	3x 20 A MCB			1	A 1		8	10	MCB	560	T			3x2,5N2XH
								2	A 2		5	10	MCB	370	S			3x2,5N2XH
								3	P 1	3		16	MCB	900	R			3x2,5N2XH
								4	P 2	3		16	MCB	900	R			3x2,5N2XH
								5	P 3	3		16	MCB	900	T			3x2,5N2XH
		SOC.P(W)	4200					6	P 4	5		16	MCB	1500	S			3x2,5N2XH
TOPLAM					5130 W					14	13			5130	R	S	T	RST
															1800	1870	1460	0

TABLE					ENTRANCE			LINE				FUSE		POWER	PHASE	INFORMATION		FEEDER N2XH
NAME	POWER			TYPE	FUSE	ELCB		NUM		SOCKET	LIGHT	CURRENT	TYPE					
	1020 W	ILLUM.P(W)	420	M.D.T	20 A MCB			1	A 1		6	10	MCB	420				3x2,5N2XH
								2	P 1	2		16	MCB	600				3x2,5N2XH
		SOC.P(W)	600															
TOTAL					1020 W					2	6			1020	R	S	T	RST
															0	0	0	0

C3-3BIT-2.9/C3-3BIT-2.10/C3-3BIT-2.11

TABLE					ENTRANCE			LINE					FUSE		POWER	PHASE	INFORMATION			FEEDER N2XH
NAME	POWER			TYPE	FUSE	ELCB		NUM		SOCKET	LIGHT		CURRENT	TYPE						
D2-3BIT-1	23010 W	ILLUM.P(W)		M.D.T.	50 A MCCB	4x50 ELCB (300mA)	4x25 ELCB	1	A 1		9		3x10	MCB	720	RST				5x2,5N2XH
								2	A 2		22		3x10	MCB	1320	RST				5x2,5N2XH
								3	A 3		22		3x10	MCB	1320	RST				5x2,5N2XH
								4	A 4		22		3x10	MCB	1320	RST				5x2,5N2XH
								5	A 5		15		3x10	MCB	900	RST				5x2,5N2XH
								6	A 6		16		3x10	MCB	960	RST				5x2,5N2XH
								7	A 7		23		3x10	MCB	1380	RST				5x2,5N2XH
								8	A 8		15		3x10	MCB	900	RST				5x2,5N2XH
								9	A 9		20		3x10	MCB	1200	RST				5x2,5N2XH
								10	A 10		20		3x10	MCB	1200	RST				5x2,5N2XH
								11	A 11		20		3x10	MCB	1200	RST				5x2,5N2XH
								12	A 12		20		3x10	MCB	1200	RST				5x2,5N2XH
								13	A 13		5		10	MCB	150	R				3x2,5N2XH
		SOC.P(W)			3x		4x25 ELCB	14	O 1				3x25	MCB	9240	RST	D2-3BIT-1.1			5x4/35m
TOTAL					23010 W					0	229				23010	R	S	T		RST
																150	0	0		22860

TABLE					ENTRANCE			LINE				FUSE		POWER	PHASE			INFORMATION	FEEDER N2XH
NAME	POWER			TYPE	FUSE	ELCB		NUM		SOCKET	LIGHT	CURRENT	TYPE						
D2-3BIT-1.1	9240 W	ILLUM.P(W)	9240	M.D.T	3x 20 A MCB			1	A 1		10	3x10	MCB	600	RST				3x2,5N2XH
								2	A 2		10	3x10	MCB	600	RST				3x2,5N2XH
								3	A 3		10	3x10	MCB	600	RST				3x2,5N2XH
								4	A 4		23	3x10	MCB	1380	RST				3x2,5N2XH
								5	A 5		15	3x10	MCB	900	RST				3x2,5N2XH
								6	A 6		14	3x10	MCB	840	RST				3x2,5N2XH
								7	A 7		12	3x10	MCB	720	RST				3x2,5N2XH
								8	A 8		12	3x10	MCB	720	RST				3x2,5N2XH
								9	A 9		16	3x10	MCB	960	RST				3x2,5N2XH
								10	A 10		16	3x10	MCB	960	RST				3x2,5N2XH
		SOC.P(W)	0					11	A 11		16	3x10	MCB	960	RST				3x2,5N2XH
								12											
								13											
TOTAL					9240 W					0	154			9240	R	S	T		RST
															0	0	0		9240

TABLE					ENTRANCE			LINE				FUSE		POWER	PHASE			INFORMATION	FEEDER N2XH
NAME	POWER			TYPE	FUSE	ELCB		NUM		SOCKET	LIGHT	CURRENT	TYPE						
D2-3BIT-2	17380 W	ILLUM.P(W)		M.D.T	3x 25 A MCCB	4x25 ELCB (300mA)	4x25 ELCB	1	A 1		5	10	MCB	240	T				3x2,5N2XH
								2	A 2			10	MCB						3x2,5N2XH
								3	P 1			16	MCB	600	R				3x2,5N2XH
								4	P 2			16	MCB						3x2,5N2XH
								5	O 1			3x25	MCB	9940	RST			B2-3BIT-2.1	5x4/27m
		SOC.P(W)					4x25 ELCB	6	O 2			3x25	MCB	6600	RST			B2-3BIT-2.2	5x4/20m
TOTAL					17380 W					0	5			17380	R	S	T		RST
															600	0	240		16540

TABLE					ENTRANCE			LINE				FUSE		POWER	PHASE	INFORMATION		FEEDER
NAME	POWER			TYPE	FUSE	ELCB		NUM		SOCKET	LIGHT	CURRENT	TYPE					N2XH
D2-3BIT-2.1	10340 W	ILLUM.P(W)	1340	M.D.T	3x 20 A MCB			1	A 1		6	10	MCB	420	R			3x2,5N2XH
								2	A 2		6	10	MCB	240	R			3x2,5N2XH
								3	A 3		9	10	MCB	180	T			3x2,5N2XH
								4	A 4		6	10	MCB	220	R			3x2,5N2XH
								5	A 5		7	10	MCB	280	T			3x2,5N2XH
								6	A 6			10	MCB			Auxilary		3x2,5N2XH
		SOC.P(W)	9000					7	P 1	5		16	MCB	1500	S			3x2,5N2XH
								8	P 2	3		16	MCB	900	T			3x2,5N2XH
								9	P 3			16	MCB	2000	R	Hand dry machine		3x2,5N2XH
								10	P 4			16	MCB	2000	T	Hand dry machine		3x2,5N2XH
								11	P 5			16	MCB	2000	S	Hand dry machine		3x2,5N2XH
								12	P 6	2		16	MCB	600				3x2,5N2XH
TOTAL					10340 W					10	34			10340	R	S	T	RST
															2880	3500	3360	0

TABLE					ENTRANCE			LINE				FUSE		POWER	PHASE	INFORMATION		FEEDER
NAME	POWER			TYPE	FUSE	ELCB		NUM		SOCKET	LIGHT	CURRENT	TYPE					N2XH
D2-3BIT-2.2	7200 W	ILLUM.P(W)	5400	M.D.T	3x 20 A MCB			1	A 1		8	10	MCB	560	S			3x2,5N2XH
								2	A 2		13	10	MCB	780	S			3x2,5N2XH
								3	A 3		10	10	MCB	800	T			3x2,5N2XH
								4	A 4		13	10	MCB	780	R			3x2,5N2XH
								5	A 5		17	3x10	MCB	1020	RST			5x2,5N2XH
								6	A 6		6	10	MCB	360	T			3x2,5N2XH
								7	A 7		5	10	MCB	300	T			3x2,5N2XH
								8	A 8		10	10	MCB	800	S			3x2,5N2XH
		SOC.P(W)	900					9	P 1	3		16	MCB	900	R			3x2,5N2XH
								10	P 2			16	MCB			Auxilary		3x2,5N2XH
								11	F 1	3		16	MCB	900	S			3x2,5N2XH
TOTAL					7200 W					6	82			7200	R	S	T	RST
															1360	2040	1460	1020

TABLE					ENTRANCE			LINE				FUSE		POWER	PHASE	INFORMATION		FEEDER N2XH
NAME	POWER			TYPE	FUSE	ELCB		NUM		SOCKET	LIGHT	CURRENT	TYPE					
D3-3BIT-1	9180 W	ILLUM.P(W)		M.D.T	3x 25 A MCCB	4x25 ELCB (300mA)	4x25 ELCB	1	A 1		6	10	MCB	480	T			3x2,5N2XH
								2	A 2		19	3x10	MCB	1140	RST			3x2,5N2XH
								3	A 3		18	3x10	MCB	1080	RST			3x2,5N2XH
								4	A 4		15	3x10	MCB	900	RST			3x2,5N2XH
								5	A 5			10	MCB			Auxilary		3x2,5N2XH
		SOC.P(W)						6	A 6			10	MCB			Auxilary		3x2,5N2XH
								7	O 1			25	MCB	2100	R	D3-3BIT-1.1		3x4/28m
								8	O 2			25	MCB	3480	S	D3-3BIT-1.2		3x4/35m
TOTAL					9180 W					0	58			9180	R	S	T	RST
															2100	3480	480	3120

TABLE					ENTRANCE			LINE				FUSE		POWER	PHASE	INFORMATION		FEEDER N2XH
NAME	POWER			TYPE	FUSE	ELCB		NUM		SOCKET	LIGHT	CURRENT	TYPE					
D3-3BIT-1.1	2100 W	ILLUM.P(W)	600	M.D.T	20 A MCB			1	A 1		9	10	MCB	600	R			3x2,5N2XH
								2	P 1	5		16	MCB	1500	R			3x2,5N2XH
		SOC.P(W)	1500															
TOTAL					2100 W					5	9			2100	R	S	T	RST
															2100	0	0	0

TABLE					ENTRANCE			LINE				FUSE		POWER	PHASE	INFORMATION		FEEDER
NAME	POWER			TYPE	FUSE	ELCB		NUM		SOCKET	LIGHT	CURRENT	TYPE					N2XH
D3-3BIT-1.2	3480 W	ILLUM.P(W)	3480	M.D.T	20 A MCB			1	A 1		12	3x10	MCB	720	RST			5x2,5N2XH
								2	A 2		18	3x10	MCB	1080	RST			5x2,5N2XH
								3	A 3		14	3x10	MCB	840	RST			5x2,5N2XH
								4	A 4		14	3x10	MCB	840	RST			5x2,5N2XH
		SOC.P(W)	0															
TOTAL					3480 W					0	58			3480	R	S	T	RST
															0	0	0	3480

TABLE					ENTRANCE			LINE						FUSE		POWER	PHASE	INFORMATION			FEEDER N2XH
NAME	POWER			TYPE	FUSE	ELCB		NUM			SOCKET	LIGHT	CURRENT	TYPE							
A1-ZIT-1	29060 W	ILLUM.P(W)		MDT	3x 40 A MCCB	4x 40A ELCB (300mA)	4x25 ELCB	1	A	1		4	10	MCB	320	R					3x2,5N2XH
								2	A	2		27	3x10	MCB	2160	RST					5x2,5N2XH
								3	A	3		29	3x10	MCB	2220	RST					5x2,5N2XH
								4	A	4		15	10	MCB	450	T					3x2,5N2XH
								5	A	5		15	10	MCB	450	T					3x2,5N2XH
								6	A	6		15	10	MCB	450	T					3x2,5N2XH
								7	A	7		18	10	MCB	480	R					3x2,5N2XH
		SOC.P(W)						8	A	8			10	MCB			Auxilary				3x2,5N2XH
								9	P	1	3		16	MCB	900	R					3x2,5N2XH
								10	P	2			16	MCB			Auxilary				3x2,5N2XH
							4x25	11	O	1			25	MCB	3930	S	A1-ZIT-1.1				3x4/33m
								12	O	2			3x25	MCB	5970	RST	A1-ZIT-1.2				5x4/44m
							4x25	13	O	3			3x32	MCB	11730	RST	A1-ZIT-1.3				5x4/33m
								14													
								15													
TOTAL					29060 W						3	123			29060	R	S		T		RST
																1700	3930		1350		22080

TABLE					ENTRANCE			LINE						FUSE		POWER	PHASE	INFORMATION			FEEDER N2XH
NAME	POWER			TYPE	FUSE	ELCB		NUM			SOCKET	LIGHT	CURRENT	TYPE							
A1-ZIT-1.1	3930 W	ILLUM.P(W)	630	MDT	20 A MCB			1	A	1		4	10	MCB	210						3x2,5N2XH
								2	A	2		6	10	MCB	420						3x2,5N2XH
								3	P	1	5		16	MCB	1500						3x2,5N2XH
								4	P	2	3		16	MCB	900						3x2,5N2XH
								5	P	3	3		16	MCB	900						3x2,5N2XH
		SOC.P(W)	3300																		
TOTAL					3930 W						11	10			3930	R	S		T		RST
																0	0		0		0

TABLE					ENTRANCE			LINE						FUSE		POWER	PHASE	INFORMATION		FEEDER N2XH
NAME	POWER			TYPE	FUSE	ELCB		NUM			SOCKET	LIGHT	CURRENT	TYPE						
A1-ZIT-1.2	5970 W	ILLUM.P(W)	870	MDT	3x 20 A MCB			1	A	1		3	10	MCB	240	R				3x2,5N2XH
								2	A	2		7	10	MCB	280	T				3x2,5N2XH
								3	A	3		5	10	MCB	350	T				3x2,5N2XH
								4	P	1	4		16	MCB	1200	R				3x2,5N2XH
								5	P	2	5		16	MCB	1500	S				3x2,5N2XH
								6	P	3	4		16	MCB	1200	S				3x2,5N2XH
								7	P	4	4		16	MCB	1200	T				3x2,5N2XH
		SOC.P(W)	5100																	
TOTAL					5970 W						17	15			5970	R	S	T	RST	
																1440	2700	1830	0	

TABLE					ENTRANCE			LINE					FUSE		POWER	PHASE	INFORMATION		FEEDER
NAME	POWER			TYPE	FUSE	ELCB		NUM			SOCKET	LIGHT	CURRENT	TYPE					N2XH
A1-ZIT-1.3	11730 W	ILLUM.P(W)	4830	MDT	3x 25 A MCB		4x 25A ELCB	1	A	1		7	10	MCB	280	R			3x2,5N2XH
								2	A	2		7	10	MCB	140	T			3x2,5N2XH
								3	A	3		4	10	MCB	80	R			3x2,5N2XH
								4	A	4		4	10	MCB	240	T			3x2,5N2XH
								5	A	5		13	10	MCB	520	R			3x2,5N2XH
								6	A	6		9	10	MCB	360	S			3x2,5N2XH
								7	A	7		4	10	MCB	160	T			3x2,5N2XH
								8	A	8		2	10	MCB	80	R			3x2,5N2XH
								9	A	9		13	10	MCB	520	R			3x2,5N2XH
								10	A	10		4	10	MCB	160	T			3x2,5N2XH
								11	A	11		9	10	MCB	360	R			3x2,5N2XH
								12	A	12		5	10	MCB	150	S			3x2,5N2XH
		SOC.P	5800				4x 25A ELCB	13	A	13		8	10	MCB	160	T			3x2,5N2XH
								14	A	14		8	10	MCB	540	R			3x2,5N2XH
								15	A	15		8	10	MCB	540	S			3x2,5N2XH
								16	A	16			10	MCB	540	T			3x2,5N2XH
								17	A	17			10	MCB			Auxilary		3x2,5N2XH
								18	P	1			16	MCB	2000	S	Hand dry machine		3x2,5N2XH
								19	P	2			16	MCB	2000	T	Hand dry machine		3x2,5N2XH
								20	P	3	3		16	MCB	900	R			3x2,5N2XH
								21	P	4	3		16	MCB	900	S			3x2,5N2XH
								22	P	5			16	MCB			Auxilary		3x2,5N2XH
								23	F	1	6		16	MCB	600	R			3x2,5N2XH
								24	F	2	5		16	MCB	500	T			3x2,5N2XH
TOTAL					11730 W						17	105			11730	R	S	T	RST
																3880	3950	3900	0

TABLE					ENTRANCE			LINE						FUSE		POWER	PHASE	INFORMATION		FEEDER N2XH
NAME	POWER			TYPE	FUSE	ELCB		NUM			SOCKET	LIGHT	CURRENT	TYPE						
A1-ZIT-2	28350 W	ILLUM.P(W)		MDT	3x 40 A MCCB	4x 40A ELCB (300mA)	4x25	1	A	1		4	10	MCB	320	R				3x2,5N2XH
								2	A	2		27	3x10	MCB	2160	RST				5x2,5N2XH
								3	A	3		29	3x10	MCB	2220	RST				5x2,5N2XH
								4	A	4		15	10	MCB	450	T				3x2,5N2XH
								5	A	5		15	10	MCB	450	T				3x2,5N2XH
								6	A	6		15	10	MCB	450	T				3x2,5N2XH
								7	A	7		18	10	MCB	480	R				3x2,5N2XH
								8	A	8			10	MCB			Auxilary			3x2,5N2XH
		SOC.P						9	P	1	3		16	MCB	900	R				3x2,5N2XH
								10	P	2			16	MCB			Auxilary			3x2,5N2XH
								11	F	1	5		16	MCB	500	S				3x2,5N2XH
							25	12	O	1			3x25	MCB	8550	RST	A1-ZIT-2.1			5x4/30m
							25	13	O	2			3x25	MCB	7320	RST	A1-ZIT-2.2			5x4/27m
							25	14	O	3			3x25	MCB	4550	RST	A1-ZIT-2.3			5x4/45m
TOTAL					28350 W						8	123			28350	R	S	T		RST
																1700	500	1350		24800

TABLE					ENTRANCE			LINE					FUSE		POWER	PHASE	INFORMATION		FEEDER N2XH
NAME	POWER			TYPE	FUSE	ELCB		NUM			SOCKET	LIGHT	CURRENT	TYPE					
A1-ZIT-2.1	8550 W	ILLUM.P(W)	6150	MDT.	3x 20 A MCB			1	A	1		6	10	MCB	360	R			3x2,5N2XH
								2	A	2		4	10	MCB	160	S			3x2,5N2XH
								3	A	3		8	10	MCB	320	T			3x2,5N2XH
								4	A	4		10	10	MCB	400	R			3x2,5N2XH
								5	A	5		9	10	MCB	360	S			3x2,5N2XH
								6	A	6		4	10	MCB	280	T			3x2,5N2XH
								7	A	7		8	10	MCB	560	R			3x2,5N2XH
								8	A	8		8	10	MCB	480	S			3x2,5N2XH
								9	A	9		8	10	MCB	560	T			3x2,5N2XH
								10	A	10		8	10	MCB	560	R			3x2,5N2XH
		SOC.P	2400					11	A	11		8	10	MCB	560	S			3x2,5N2XH
								12	A	12		10	10	MCB	700	T			3x2,5N2XH
								13	A	13		7	10	MCB	490	R			3x2,5N2XH
								14	A	14		6	10	MCB	360	S			3x2,5N2XH
								15	P	1	3		16	MCB	900	T			3x2,5N2XH
								16	P	2	3		16	MCB	900	R			3x2,5N2XH
								17	P	3	2		16	MCB	600	S			3x2,5N2XH
TOTAL					8550 W						8	104			8550	R	S	T	RST
																3270	2520	2760	0

TABLE					ENTRANCE			LINE					FUSE		POWER	PHASE	INFORMATION		FEEDER N2XH
NAME	POWER			TYPE	FUSE	ELCB		NUM			SOCKET	LIGHT	CURRENT	TYPE					
A1-ZIT-2.2	7320 W	ILLUM.P(W)	1220	MDT.	3x 20 A MCB		I	1	A	1		7	10	MCB	280	T			3x2,5N2XH
								2	A	2		7	10	MCB	140	S			3x2,5N2XH
								3	A	3		4	10	MCB	80	T			3x2,5N2XH
								4	A	4		9	10	MCB	360	T			3x2,5N2XH
								5	A	5		9	10	MCB	360	T			3x2,5N2XH
								6	A	6			10	MCB			Auxilary		3x2,5N2XH
		SOC.P	5200					7	P	1			16	MCB	2000	R	Hand dry machine		3x2,5N2XH
								8	P	2			16	MCB	2000	S	Hand dry machine		3x2,5N2XH
								9	P	3	4		16	MCB	1200	T			3x2,5N2XH
								10	P	4			16	MCB			Auxilary		3x2,5N2XH
							II	11	F	1	4		16	MCB	400	R			3x2,5N2XH
								12	F	2	5		16	MCB	500	S			3x2,5N2XH
								13											
								14											
								15											
TOTAL					7320 W						13	36			7320	R	S	T	RST
																2400	2640	2280	0

TABLE					ENTRANCE			LINE					FUSE		POWER	PHASE	INFORMATION		FEEDER N2XH
NAME	POWER			TYPE	FUSE	ELCB		NUM			SOCKET	LIGHT	CURRENT	TYPE					
A1-ZIT-2.3	4550 W	ILLUM.P(W)	3650	MDT	3x 20 A MCB		I	1	A	1		11	10	MCB	440	R			3x2,5N2XH
								2	A	2		5	10	MCB	300	T			3x2,5N2XH
								3	A	3		10	10	MCB	400	S			3x2,5N2XH
								4	A	4		32	3x10	MCB	1280	RST			5x2,5N2XH
								5	A	5		10	10	MCB	400	R			3x2,5N2XH
								6	A	6		11	10	MCB	440	S			3x2,5N2XH
								7	A	7		5	10	MCB	300	T			3x2,5N2XH
		SOC.P	600					8	A	8		3	10	MCB	90	R			3x2,5N2XH
								9	A	9			10	MCB			Auxilary		3x2,5N2XH
								10	P	1	2		16	MCB	600	T			3x2,5N2XH
							II	11	P	2			16	MCB					3x2,5N2XH
								12	F	1	3		16	MCB	300	S			3x2,5N2XH
								13											
								14											
								15											
TOTAL					4550 W						5	87			4550	R	S	T	RST
																930	1140	1200	1280

TABLE			ENTRANCE			LINE					FUSE		POWER	PHASE	INFORMATION		FEEDER N2XH
NAME	POWER	TYPE	FUSE	ELCB		NUM			SOCKET	LIGHT	CURRENT	TYPE					
B2-ZIT-1	57590 W	MDT	3x 80 A MCCB	4x 80A ELCB (300mA)	4x25 ELCB	1	A	1		6	10	MCB	240	R			3x2,5N2XH
						2	A	2		4	10	MCB	240	S			3x2,5N2XH
						3	A	3		7	10	MCB	280	T			3x2,5N2XH
						4	A	4		4	10	MCB	240	R			3x2,5N2XH
						5	A	5		6	10	MCB	360	S			3x2,5N2XH
						6	A	6		4	10	MCB	240	T			3x2,5N2XH
						7	A	7		10	10	MCB	400	R			3x2,5N2XH
						8	A	8		19	3x10	MCB	1520	RST			5x2,5N2XH
						9	A	9		10	10	MCB	400	S			3x2,5N2XH
						10	A	10		10	10	MCB	400	T			3x2,5N2XH
						11	A	11		38	3x10	MCB	1520	RST			5x2,5N2XH
						12	A	12		5	10	MCB	150	R			3x2,5N2XH
						13	A	13			10	MCB			Auxilary		3x2,5N2XH
						14	P	1	2		16	MCB	600	S			3x2,5N2XH
					4x25 ELCB	15	P	2			16	MCB	2000	R	Hand dry machine		3x2,5N2XH
						16	P	3			16	MCB	2000	S	Hand dry machine		3x2,5N2XH
						17	P	4	2		16	MCB	600	R			3x2,5N2XH
						18	P	5			16	MCB	2000	T	Hand dry machine		3x2,5N2XH
						19	P	6			16	MCB	2000	R	Hand dry machine		3x2,5N2XH
						20	P	7	3		16	MCB	900	S			3x2,5N2XH
						21	P	8	3		16	MCB	900	T			3x2,5N2XH
						22	P	9	4		16	MCB	1200	S			3x2,5N2XH
						23	P	10	4		16	MCB	1200	T			3x2,5N2XH
						24	F	1			16	MCB			Auxilary		3x2,5N2XH
						25	F	2	6		16	MCB	600	R			3x2,5N2XH
						26	F	3	6		16	MCB	600	S			3x2,5N2XH
						27	F	4	7		16	MCB	700	T			3x2,5N2XH
						28	F	5	6		16	MCB	600	T			3x2,5N2XH
					4x 4x25	29	O	1			3x25	MCB	5950	RST	B1-ZIT-1.1		5X4/30m
						30	O	2			3x25	MCB	5950	RST	B1-ZIT-1.2		5X4/31m
						31	O	3			3x25	MCB	5950	RST	B1-ZIT-1.3		5X4/9m
TOTAL			57590 W						43	123			57590	R	S	T	RST
														6230	6300	6320	38740

TABLE					ENTRANCE			LINE						FUSE		POWER	PHASE	INFORMATION		FEEDER N2XH
NAME	POWER			TYPE	FUSE	ELCB		NUM			SOCKET	LIGHT		CURRENT	TYPE					
	5950 W	ILLUM.P(W)	1450	MDT	3x 20 A MCB			1	A	1		9		10	MCB	630	R			3x2,5N2XH
								2	A	2		5		10	MCB	200	T			3x2,5N2XH
								3	A	3		6		10	MCB	420	T			3x2,5N2XH
								4	A	4		5		10	MCB	200	R			3x2,5N2XH
								5	P	1	4			16	MCB	1200	R			3x2,5N2XH
		SOC.P(W)	4500					6	P	2	3			16	MCB	900	S			3x2,5N2XH
								7	P	3	4			16	MCB	1200	T			3x2,5N2XH
								8	P	4	4			16	MCB	1200	S			3x2,5N2XH
TOTAL					5950 W						15	25				5950	R	S	T	RST
																	2030	2100	1820	0

B2-ZIT-1.1\B2-ZIT-1.2\B2-ZIT-1.3\B2-ZIT-1.4\B2-ZIT-1.5\B2-ZIT-1.6

TABLE					ENTRANCE			LINE						FUSE		POWER	PHASE	INFORMATION		FEEDER N2XH
NAME	POWER			TYPE	FUSE	ELCB		NUM			SOCKET	LIGHT		CURRENT	TYPE					
B2-ZIT-2	58830 W	ILLUM.P(W)		MDT	80 A MCCB	4x80 ELCB (300 mA)	4x25	1	O	1				3x25	MCB	5950	RST	B2-ZIT-2.1		5x4/48m
								2	O	2				3x25	MCB	5950	RST	B2-ZIT-2.2		5x4/47m
							25	3	O	3				3x25	MCB	5950	RST	B2-ZIT-2.3		5x4/27m
							4x25	4	O	4				3x25	MCB	5950	RST	B2-ZIT-2.4		5x4/26m
								5	O	8				25	MCB	2190	R	B2-ZIT-2.8		3x6/55m
		SOC.P(W)					25	6	O	5				3x32	MCCB	16400	RST	B2-ZIT-2.5		5x6/20m
							25	7	O	6				3x25	MCB	10640	RST	B2-ZIT-2.6		5x4/27m
							25	8	O	7				3x25	MCB	5800	RST	B2-ZIT-2.7		5x4/20m
TOTAL					58830 W						0	0				58830	R	S	T	RST
																	2190	0	0	56640

TABLE					ENTRANCE			LINE					FUSE		POWER	PHASE	INFORMATION		BESLSME N2XH
NAME	POWER			TYPE	FUSE	ELCB		NUM			SOCKET	LIGHT	CURRENT	TYPE					
	5950 W	ILLUM.P(W)	1450	MDT	3x 20 A MCB			1	A	1		9	10	MCB	630	R			3x2,5N2XH
								2	A	2		5	10	MCB	200	T			3x2,5N2XH
								3	A	3		6	10	MCB	420	T			3x2,5N2XH
								4	A	4		5	10	MCB	200	R			3x2,5N2XH
								5	P	1	4		16	MCB	1200	R			3x2,5N2XH
		SOC.P(W)	4500					6	P	2	4		16	MCB	1200	T			3x2,5N2XH
								7	P	3	3		16	MCB	900	S			3x2,5N2XH
								8	P	4	4		16	MCB	1200	S			3x2,5N2XH
TOTAL					5950 W						15	25			5950	R	S	T	RST
																2030	2100	1820	0

B2-ZIT-2.1\B2-ZIT-2.2\B2-2ZIT-2.3\B2-ZIT-2.4

TABLE					ENTRANCE			LINE					FUSE		POWER	PHASE	INFORMATION		FEEDER N2XH
NAME	POWER			TYPE	FUSE	ELCB		NUM			SOCKET	LIGHT	CURRENT	TYPE					
B2-ZIT-2.5	16400 W	ILLUM.P(W)	5900	MDT	3x 25 A MCB		4x 25A ELCB	1	A	1		4	10	MCB	160	S			3x2,5N2XH
								2	A	2		28	3x10	MCB	1120	RST			5x2,5N2XH
								3	A	3		7	10	MCB	280	T			3x2,5N2XH
								4	A	4		4	10	MCB	160	S			3x2,5N2XH
								5	A	5		6	10	MCB	240	S			3x2,5N2XH
								6	A	6		10	10	MCB	400	R			3x2,5N2XH
								7	A	7		16	3x10	MCB	1180	RST			5x2,5N2XH
								8	A	8		10	10	MCB	400	R			3x2,5N2XH
								9	A	9		5	10	MCB	200	S			3x2,5N2XH
								10	A	10		8	10	MCB	320	T			3x2,5N2XH
								11	A	11		16	10	MCB	480	R			3x2,5N2XH
								12	A	12		16	10	MCB	480	S			3x2,5N2XH
								13	A	13		16	10	MCB	480	T			3x2,5N2XH
		SOC.P	8500				4x 25A ELCB	14	A	14			10	MCB			Auxilary		3x2,5N2XH
								15	P	1	3		16	MCB	900	T			3x2,5N2XH
								16	P	2	2		16	MCB	600	R			3x2,5N2XH
								17	P	3			16	MCB	2000	R	Hand dry machine		3x2,5N2XH
								18	P	4			16	MCB	2000	S	Hand dry machine		3x2,5N2XH
								19	P	5	4		16	MCB	1200	T			3x2,5N2XH
								20	P	6	3		16	MCB	900	S			3x2,5N2XH
								21	P	7	3		16	MCB	900	T			3x2,5N2XH
								22	P	8			16	MCB			Auxilary		3x2,5N2XH
								23	F	1	4		16	MCB	400	R			3x2,5N2XH
								24	F	2	6		16	MCB	600	S			3x2,5N2XH
								25	F	3	6		16	MCB	600	T			3x2,5N2XH
								26	F	4	4		16	MCB	400	R			3x2,5N2XH
TOTAL					16400 W						35	146			16400	R	S	T	RST
																4680	4740	4680	2300

TABLE					ENTRANCE			LINE						FUSE		POWER	PHASE	INFORMATION		FEEDER N2XH
NAME	POWER			TYPE	FUSE	ELCB		NUM			SOCKET	LIGHT	CURRENT	TYPE						
B2-ZIT-2.6	10640 W	ILLUM.P(W)	1340	MDT	3x 20 A MCB		I	1	A	1		6	10	MCB	420	R				3x2,5N2XH
								2	A	2		6	10	MCB	240	S				3x2,5N2XH
								3	A	3		9	10	MCB	180	T				3x2,5N2XH
								4	A	4		6	10	MCB	220	R				3x2,5N2XH
								5	A	5		7	10	MCB	280	T				3x2,5N2XH
								6	A	6			10	MCB			Auxilary			3x2,5N2XH
		SOC.P	8400					7	P	1	5		16	MCB	1500	S				3x2,5N2XH
								8	P	2	3		16	MCB	900	T				3x2,5N2XH
								9	P	3			16	MCB	2000	R	Hand dry machine			3x2,5N2XH
								10	P	4			16	MCB	2000	T	Hand dry machine			3x2,5N2XH
							II	11	P	5			16	MCB	2000	S	Hand dry machine			3x2,5N2XH
								12	P	6			16	MCB			Auxilary			3x2,5N2XH
								13	F	1	4		16	MCB	400	R				3x2,5N2XH
								14	F	2	5		16	MCB	500	R				3x2,5N2XH
								15												
TOTAL					10640 W						17	34			10640	R	S	T		RST
																3540	3740	3360		0

TABLE					ENTRANCE			LINE						FUSE		POWER	PHASE	INFORMATION		FEEDER N2XH
NAME	POWER			TYPE	FUSE	ELCB		NUM			SOCKET	LIGHT	CURRENT	TYPE						
B2-ZIT-2.7	5800 W	ILLUM.P(W)	4600	MDT	3x 20 A MCB		I	1	A	1		8	10	MCB	560	S				3x2,5N2XH
								2	A	2		13	10	MCB	780	S				3x2,5N2XH
								3	A	3		10	10	MCB	800	T				3x2,5N2XH
								4	A	4		13	10	MCB	780	R				3x2,5N2XH
								5	A	5		17	3x10	MCB	1020	RST				5x2,5N2XH
								6	A	6		6	10	MCB	360	T				3x2,5N2XH
								7	A	7		5	10	MCB	300	T				3x2,5N2XH
								8	A	8			10	MCB		S	Auxilary			3x2,5N2XH
		SOC.P	900					9	P	1	3		16	MCB	900	R				3x2,5N2XH
								10	P	2			16	MCB		R	Auxilary			3x2,5N2XH
							II	11	F	1	3		16	MCB	300	S				3x2,5N2XH
								12												
								13												
								14												
								15												
TOTAL					5800 W						6	72			5800	R	S	T		RST
																1680	1640	1460		1020

TABLE					ENTRANCE			LINE						FUSE		POWER	PHASE	INFORMATION		FEEDER N2XH
NAME	POWER			TYPE	FUSE	ELCB		NUM			SOCKET	LIGHT	CURRENT	TYPE						
B2-ZIT-2.8	2190 W	ILLUM.P(W)	690	MDT	20 A MCB			1	A	1		7	10	MCB	490					3x2,5N2XH
								2	A	2		5	10	MCB	200					3x2,5N2XH
								3	P	1	5		16	MCB	1500					3x2,5N2XH
		SOC.P(W)	1500																	
TOTAL					2190 W						5	12			2190	R	S	T		RST
																0	0	0		0

TABLE					ENTRANCE			LINE					FUSE		POWER	PHASE	INFORMATION		FEEDER
NAME	POWER			TYPE	FUSE	ELCB		NUM			SOCKET	LIGHT	CURRENT	TYPE					N2XH
B3-ZIT-1	68930 W	ILLUM.P(W)	7450	MDT	3x 100 A MCCB	4x 100A ELCB (300 mA)	4x25 ELCB	1	A	1		7	10	MCB	280	T			3x2,5N2XH
								2	A	2		4	10	MCB	240	S			3x2,5N2XH
								3	A	3		7	10	MCB	280	T			3x2,5N2XH
								4	A	4		4	10	MCB	240	T			3x2,5N2XH
								5	A	5		6	10	MCB	240	S			3x2,5N2XH
								6	A	6		4	10	MCB	240	T			3x2,5N2XH
								7	A	7		10	10	MCB	400	S			3x2,5N2XH
								8	A	8		22	3x10	MCB	1760	RST			5x2,5N2XH
								9	A	9		10	10	MCB	400	T			3x2,5N2XH
								10	A	10		6	10	MCB	240	S			3x2,5N2XH
								11	A	11		37	3x10	MCB	1480	RST			5x2,5N2XH
								12	A	12		10	10	MCB	300	T			3x2,5N2XH
								13	A	13		15	10	MCB	450	S			3x2,5N2XH
							4x25 ELCB	14	A	14		15	10	MCB	450	T			3x2,5N2XH
								15	A	15		15	10	MCB	450	R			3x2,5N2XH
								16	A	16			10	MCB			Auxilary		3x2,5N2XH
								17	P	1	2		16	MCB	600	T			3x2,5N2XH
								18	P	2			16	MCB	2000	S			3x2,5N2XH
								19	P	3			16	MCB	2000	R			3x2,5N2XH
								20	P	4	2		16	MCB	600	T			3x2,5N2XH
								21	P	5			16	MCB	2000	T	Hand dry machine		3x2,5N2XH
								22	P	6			16	MCB	2000	R	Hand dry machine		3x2,5N2XH
								23	P	7	3		16	MCB	900	S			3x2,5N2XH
							4x25 ELCB	24	P	8	3		16	MCB	900	S			3x2,5N2XH
								25	P	9	4		16	MCB	1200	T			3x2,5N2XH
								26	P	10	4		16	MCB	1200	S			3x2,5N2XH
								27	P	11			16	MCB			Auxilary		3x2,5N2XH
								28	F	1	5		16	MCB	500	R			3x2,5N2XH
								29	F	2	6		16	MCB	600	S			3x2,5N2XH
								30	F	3	6		16	MCB	600	T			3x2,5N2XH
								31	F	4	6		16	MCB	600	R			3x2,5N2XH
								32	F	5	6		16	MCB	600	S			3x2,5N2XH
								33	F	6	6		16	MCB	600	T			3x2,5N2XH
							25	34	O	1			3x20	MCB	5950	RST	B3-ZIT-1.1		5X4/30m
								35	O	2			3x20	MCB	5950	RST	B3-ZIT-1.2		5X4/31m
							4x2	36	O	3			3x20	MCB	5950	RST	B3-ZIT-1.3		5X4/9m
								37	O	4			3x20	MCB	5950	RST	B3-ZIT-1.4		5X4/10m
							4x2	38	O	5			3x20	MCB	5950	RST	B3-ZIT-1.5		5X4/30m
								39	O	6			3x20	MCB	5950	RST	B3-ZIT-1.6		5X4/31m
							4x25 ELCB	40	O	7			20	MCB	2220	R	B3-ZIT-1.7		3x6/35m
								41	O	8			20	MCB	2220	S	B3-ZIT-1.8		3x6/34m
								42	O	9			20	MCB	2220	T	B3-ZIT-1.9		3x4/14m
								43	O	10			20	MCB	2220	R	B3-ZIT-1.10		3x4/15m
		SOC.P	13400																
TOTAL					68930 W						53	172			68930	R 9990	S 9990	T 10010	RST 38940

TABLE					ENTRANCE			LINE					FUSE		POWER	PHASE	INFORMATION		FEEDER N2XH
NAME	POWER			TYPE	FUSE	ELCB		NUM			SOCKET	LIGHT	CURRENT	TYPE					
	5950 W	ILLUM.P(W)	1450	MDT	3x 20 A MCB			1	A	1		9	10	MCB	630	R			3x2,5N2XH
								2	A	2		5	10	MCB	200	T			3x2,5N2XH
								3	A	3		6	10	MCB	420	T			3x2,5N2XH
								4	A	4		5	10	MCB	200	R			3x2,5N2XH
								5	P	1	4		16	MCB	1200	R			3x2,5N2XH
		SOC.P(W)	4500					6	P	2	3		16	MCB	900	S			3x2,5N2XH
								7	P	3	4		16	MCB	1200	T			3x2,5N2XH
								8	P	4	4		16	MCB	1200	S			3x2,5N2XH
TOTAL					5950 W						15	25			5950	R	S	T	RST
																2030	2100	1820	0

B3-ZIT-1.1\B3-ZIT-1.2\B3-ZIT-1.3\B3-ZIT-1.4\B3-ZIT-1.5\B3-ZIT-1.6

TABLE					ENTRANCE			LINE					FUSE		POWER	PHASE	INFORMATION		FEEDER N2XH
NAME	POWER			TYPE	FUSE	ELCB		NUM			SOCKET	LIGHT	CURRENT	TYPE					
	2220 W	ILLUM.P(W)	420	MDT	20 A MCB			1	A	1		9	10	MCB	420				3x2,5N2XH
								2	P	1		5	16	MCB	1800				3x2,5N2XH
		SOC.P(W)	1800																
TOTAL					2220 W						0	14			2220	R	S	T	RST
																0	0	0	0

B3-ZIT-1.7\B3-ZIT-1.8\B3-ZIT-1.9\B3-ZIT-1.10

TABLE					ENTRANCE			LINE						FUSE		POWER	PHASE	INFORMATION		FEEDER N2XH
NAME	POWER			TYPE	FUSE	ELCB		NUM			SOCKET	LIGHT	CURRENT	TYPE						
C1-ZIT-1	43010 W	ILLUM.P(W)		MDT.	3x 63 A MCCB	4x 63A ELCB (300mA)	4X25 ELCB	1	A	1		6	10	MCB	120	S				3x2,5N2XH
								2	A	2		8	10	MCB	320	T				3x2,5N2XH
								3	A	3		5	10	MCB	200	R				3x2,5N2XH
								4	A	4		21	3x10	MCB	840	RST				5x2,5N2XH
								5	A	5		6	10	MCB	480	S				3x2,5N2XH
								6	A	6		6	10	MCB	240	T				3x2,5N2XH
								7	A	7		6	10	MCB	480	T				3x2,5N2XH
								8	A	8		7	10	MCB	520	T				3x2,5N2XH
								9	A	9		12	3x10	MCB	960	RST				3x2,5N2XH
								10	A	10		8	10	MCB	240	R				3x2,5N2XH
								11	A	11		13	10	MCB	390	S				3x2,5N2XH
								12	A	12		11	10	MCB	330	T				3x2,5N2XH
								13	A	13			10	MCB			Auxilary			3x2,5N2XH
		SOC.P					4X25 ELCB	14	P	1			16	MCB	2000	T	Hand dry machine			3x2,5N2XH
								15	P	2	3		16	MCB	900	S				3x2,5N2XH
								16	P	3			16	MCB	2000	S	Hand dry machine			3x2,5N2XH
								17	P	4	4		16	MCB	1200	R				3x2,5N2XH
								18	P	5	2		16	MCB	600	S				3x2,5N2XH
								19	P	6			16	MCB			Auxilary			3x2,5N2XH
								20	F	1	6		16	MCB	600	T				3x2,5N2XH
								21	F	2	6		16	MCB	600	S				3x2,5N2XH
								22	F	3	5		16	MCB	500	T				3x2,5N2XH
								23	F	4	7		16	MCB	700	T				3x2,5N2XH
							4x25	24	O	1			25	MCB	3930	R	C1-ZIT-1.1			3X6/31m
								25	O	2			25	MCB	3930	S	C1-ZIT-1.2			3X6/30m
								26	O	3			3x25	MCB	6800	RST	C1-ZIT-1.3			5X4/8m
							4x25	27	O	4			25	MCB	3420	T	C1-ZIT-1.4			3X4/15m
								28	O	5			25	MCB	3420	R	C1-ZIT-1.5			3X6/40m
							4x25	29	O	6			3x25	MCB	7290	RST	C1-ZIT-1.6			5X4/46m
TOTAL					43010 W						33	109			43010	R	S	T		RST
																8990	9020	9110		15890

TABLE					ENTRANCE			LINE					FUSE		POWER	PHASE	INFORMATION		FEEDER N2XH
NAME	POWER			TYPE	FUSE	ELCB		NUM			SOCKET	LIGHT	CURRENT	TYPE					
C1-ZIT-1.1/C1-ZIT-1.2	3930 W	ILLUM.P(W)	630	MDT	20 A MCB			1	A	1		9	10	MCB	630				3x2,5N2XH
								2	P	1	4		16	MCB	1200				3x2,5N2XH
								3	P	2	4		16	MCB	1200				3x2,5N2XH
								4	P	3	3		16	MCB	900				3x2,5N2XH
		SOC.P(W)	3300																
TOTAL					3930 W						11	9			3930	R	S	T	RST
																0	0	0	0

TABLE					ENTRANCE			LINE					FUSE		POWER	PHASE	INFORMATION		FEEDER N2XH
NAME	POWER			TYPE	FUSE	ELCB		NUM			SOCKET	LIGHT	CURRENT	TYPE					
C1-ZIT-1.3	6800 W	ILLUM.P(W)	1400	MDT	3x 20 A MCB			1	A	1		6	10	MCB	420	T			3x2,5N2XH
								2	A	2		8	10	MCB	560	T			3x2,5N2XH
								3	A	3		6	10	MCB	420	S			3x2,5N2XH
								4	P	1	4		16	MCB	1200	R			3x2,5N2XH
								5	P	2	4		16	MCB	1200	S			3x2,5N2XH
								6	P	3	4		16	MCB	1200	T			3x2,5N2XH
								7	P	4	3		16	MCB	900	R			3x2,5N2XH
								8	P	5	3		16	MCB	900	S			3x2,5N2XH
		SOC.P(W)	5400																
TOTAL					6800 W						18	20			6800	R	S	T	RST
																2100	2520	2180	0

TABLE					ENTRANCE			LINE					FUSE		POWER	PHASE	INFORMATION		FEEDER N2XH
NAME	POWER			TYPE	FUSE	ELCB		NUM			SOCKET	LIGHT	CURRENT	TYPE					
	3420 W	ILLUM.P(W)	1620	MDT	20 A MCB			1	A 1			8	10	MCB	320				3x2,5N2XH
								2	A 2			7	10	MCB	490				3x2,5N2XH
								3	A 3			7	10	MCB	490				3x2,5N2XH
								4	A 4			8	10	MCB	320				3x2,5N2XH
								5	P 1		4		16	MCB	1200				3x2,5N2XH
		SOC.P(W)	1800					6	P 2		2		16	MCB	600				3x2,5N2XH
TOTAL					3420 W						6	30			3420	R	S	T	RST
																0	0	0	0

C1-ZIT-1.4\C1-ZIT-1.5

TABLE					ENTRANCE			LINE					FUSE		POWER	PHASE	INFORMATION		FEEDER N2XH
NAME	POWER			TYPE	FUSE	ELCB		NUM			SOCKET	LIGHT	CURRENT	TYPE					
C1-ZIT-1.6	7290 W	ILLUM.P(W)	1790	MDT	3x 20 A MCB			1	A 1			7	10	MCB	280	R			3x2,5N2XH
								2	A 2			4	10	MCB	160	S			3x2,5N2XH
								3	A 3			15	10	MCB	450	R			3x2,5N2XH
								4	A 4			15	10	MCB	450	S			3x2,5N2XH
								5	A 5			15	10	MCB	450	T			3x2,5N2XH
								6	A 6				10	MCB			Auxilary		3x2,5N2XH
		SOC.P(W)	5500					7	P 1		5		16	MCB	1500	S			3x2,5N2XH
								8	P 2				16	MCB	2000	T	Hand dry machine		3x2,5N2XH
								9	P 3				16	MCB	2000	R	Hand dry machine		3x2,5N2XH
								10	P 4				16	MCB			Auxilary		
TOTAL					7290 W						5	56			7290	R	S	T	RST
																2730	2110	2450	0

TABLE			ENTRANCE			LINE				FUSE		POWER	PHASE	INFORMATION	FEEDER N2XH
NAME	POWER	TYPE	FUSE	ELCB		NUM		SOCKET	LIGHT	CURRENT	TYPE				
C1-ZIT-2	31640 W	MDT	3x 50 A MCCB	4x 50A ELCB (300mA)	4x25 ELCB	1	A 1		6	10	MCB	240	S		3x2,5N2XH
						2	A 2		34	3x10	MCB	1360	RST		5x2,5N2XH
						3	A 3		6	10	MCB	240	T		3x2,5N2XH
						4	A 4		16	3x10	MCB	1280	RST		5x2,5N2XH
						5	A 5		7	10	MCB	520	R		3x2,5N2XH
						6	A 6		6	10	MCB	480	R		3x2,5N2XH
						7	A 7		8	10	MCB	320	R		3x2,5N2XH
						8	A 8		15	10	MCB	390	S		3x2,5N2XH
						9	A 9			10	MCB	450	T		3x2,5N2XH
						10	A 10			10	MCB			Auxilary	3x2,5N2XH
					4x25 ELCB	11	P 1	5		16	MCB	1500	T		3x2,5N2XH
						12	P 2	4		16	MCB	1200	T		3x2,5N2XH
						13	P 3			16	MCB	2000	T	Hand dry machine	3x2,5N2XH
						14	P 4	2		16	MCB	600	R		3x2,5N2XH
						15	P 5			16	MCB	2000	S	Hand dry machine	3x2,5N2XH
						16	P 6			16	MCB			Auxilary	3x2,5N2XH
						17	F 1	4		16	MCB	400	T		3x2,5N2XH
						18	F 2	6		16	MCB	600	R		3x2,5N2XH
						19	F 3	3		16	MCB	300	T		3x2,5N2XH
					4x25	20	O 1			25	MCB	3420	R	C1-ZIT-2.1	3x4/20m
						21	O 2			25	MCB	3420	S	C1-ZIT-2.2	3x4/20m
					4x25	22	O 3			3x25	MCB	5460	RST	C1-ZIT-2.3	5x4/11m
						23	O 4			3x25	MCB	5460	RST	C1-ZIT-2.4	5x4/10m
TOTAL			31640 W					24	98			31640	R	S	T	RST
													5940	6050	6090	13560

TABLE					ENTRANCE			LINE						FUSE		POWER	PHASE	INFORMATION		FEEDER N2XH
NAME	POWER			TYPE	FUSE	ELCB		NUM			SOCKET	LIGHT	CURRENT	TYPE						
	3420 W	ILLUM.P(W)	1620	MDT	20 A MCB			1	A	1		8	10	MCB	320					3x2,5N2XH
								2	A	2		7	10	MCB	490					3x2,5N2XH
								3	A	3		7	10	MCB	490					3x2,5N2XH
								4	A	4		8	10	MCB	320					3x2,5N2XH
								5	P	1	4		16	MCB	1200					3x2,5N2XH
		SOC.P(W)	1800					6	P	2	2		16	MCB	600					3x2,5N2XH
TOTAL					3420 W						6	30			3420	R	S	T	RST	
																0	0	0	0	

C1-ZIT-2.1\C1-ZIT-2.2

TABLE					ENTRANCE			LINE						FUSE		POWER	PHASE	INFORMATION		FEEDER N2XH
NAME	POWER			TYPE	FUSE	ELCB		NUM			SOCKET	LIGHT	CURRENT	TYPE						
C1-ZIT-2.3\C1-ZIT-2.4	6660 W	ILLUM.P(W)	1260	MDT	3x 20 A MCB			1	A	1		6	10	MCB	420	R				3x2,5N2XH
								2	A	2		6	10	MCB	420	R				3x2,5N2XH
								3	A	3		6	10	MCB	420	S				3x2,5N2XH
								4	P	1	4		16	MCB	1200	R				3x2,5N2XH
								5	P	2	4		16	MCB	1200	T				3x2,5N2XH
		SOC.P(W)	5400					6	P	3	4		16	MCB	1200	T				3x2,5N2XH
								7	P	4	3		16	MCB	900	S				3x2,5N2XH
								8	P	5	3		16	MCB	900	S				3x2,5N2XH
TOTAL					6660 W						18	18			6660	R	S	T	RST	
																2040	2220	2400	0	

TABLE					ENTRANCE			LINE					FUSE							FEEDER
NAME	POWER			TYPE	FUSE	ELCB		NUM			SOCKET	LIGHT	CURRENT	TYPE	POWER	PHASE	INFORMATION			N2XH
D3-ZIT-1	68930 W	ILLUM.P(W)		MDT	3x 100 A MCCB	4x 100A ELCB (300mA)	4x25 ELCB	1	A	1		7	10	MCB	280	T				3x2,5N2XH
								2	A	2		4	10	MCB	240	S				3x2,5N2XH
								3	A	3		7	10	MCB	280	T				3x2,5N2XH
								4	A	4		4	10	MCB	240	T				3x2,5N2XH
								5	A	5		6	10	MCB	240	S				3x2,5N2XH
								6	A	6		4	10	MCB	240	T				3x2,5N2XH
								7	A	7		10	10	MCB	400	S				3x2,5N2XH
								8	A	8		22	3x10	MCB	1760	RST				5x2,5N2XH
								9	A	9		10	10	MCB	400	T				3x2,5N2XH
								10	A	10		6	10	MCB	240	S				3x2,5N2XH
							4x25 ELCB	11	A	11		37	3x10	MCB	1480	RST				5x2,5N2XH
								12	A	12		10	10	MCB	300	T				3x2,5N2XH
								13	A	13		15	10	MCB	450	S				3x2,5N2XH
								14	A	14		15	10	MCB	450	T				3x2,5N2XH
								15	A	15		15	10	MCB	450	R				3x2,5N2XH
								16	A	16			10	MCB			Auxilary			3x2,5N2XH
								17	P	1	2		16	MCB	600	T				3x2,5N2XH
								18	P	2			16	MCB	2000	S				3x2,5N2XH
								19	P	3			16	MCB	2000	R				3x2,5N2XH
								20	P	4	2		16	MCB	600	T				3x2,5N2XH
								21	P	5			16	MCB	2000	T	Hand dry machine			3x2,5N2XH
								22	P	6			16	MCB	2000	R	Hand dry machine			3x2,5N2XH
								23	P	7	3		16	MCB	900	S				3x2,5N2XH
							4x25 ELCB	24	P	8	3		16	MCB	900	S				3x2,5N2XH
								25	P	9	4		16	MCB	1200	T				3x2,5N2XH
								26	P	10	4		16	MCB	1200	S				3x2,5N2XH
								27	P	11			16	MCB			Auxilary			3x2,5N2XH
								28	F	1	5		16	MCB	500	R				3x2,5N2XH
								29	F	2	6		16	MCB	600	S				3x2,5N2XH
								30	F	3	6		16	MCB	600	T				3x2,5N2XH
								31	F	4	6		16	MCB	600	R				3x2,5N2XH
								32	F	5	6		16	MCB	600	S				3x2,5N2XH
								33	F	6	6		16	MCB	600	T				3x2,5N2XH
		SOC.P					4x2	34	O	1			3x25	MCB	5950	RST	D3-ZIT-1.1			5X4/30m
								35	O	2			3x25	MCB	5950	RST	D3-ZIT-1.2			5X4/31m
							4x2	36	O	3			3x25	MCB	5950	RST	D3-ZIT-1.3			5X4/9m
								37	O	4			3x25	MCB	5950	RST	D3-ZIT-1.4			5X4/10m
							4x2	38	O	5			3x25	MCB	5950	RST	D3-ZIT-1.5			5X4/30m
								39	O	6			3x25	MCB	5950	RST	D3-ZIT-1.6			5X4/31m
							4x25 ELCB	40	O	7			25	MCB	2220	R	D3-ZIT-1.7			3x6/35m
								41	O	8			25	MCB	2220	S	D3-ZIT-1.8			3x6/34m
								42	O	9			25	MCB	2220	T	D3-ZIT-1.9			3x4/14m
								43	O	10			25	MCB	2220	R	D3-ZIT-1.10			3x4/15m
TOTAL					68930 W						53	172			68930	R 9990	S 9990	T 10010		RST 38940

TABLE					ENTRANCE			LINE						FUSE		POWER	PHASE	INFORMATION		FEEDER N2XH
NAME	POWER			TYPE	FUSE	ELCB		NUM			SOCKET	LIGHT	CURRENT	TYPE						
	5950 W	ILLUM.P(W)	1450	MDT	3x 20 A MCB			1	A	1		9	10	MCB	630	R				3x2,5N2XH
								2	A	2		5	10	MCB	200	T				3x2,5N2XH
								3	A	3		6	10	MCB	420	T				3x2,5N2XH
								4	A	4		5	10	MCB	200	R				3x2,5N2XH
		SOC.P(W)	4500					5	P	1	4		16	MCB	1200	R				3x2,5N2XH
								6	P	2	3		16	MCB	900	S				3x2,5N2XH
								7	P	3	4		16	MCB	1200	T				3x2,5N2XH
								8	P	4	4		16	MCB	1200	S				3x2,5N2XH
TOTAL					5950 W						15	25			5950	R	S	T	RST	
																2030	2100	1820	0	

D3-ZIT-1.1\D3-ZIT-1.2\D3-ZIT-1.3\D3-ZIT-1.4\D3-ZIT-1.5\D3-ZIT-1.6

TABLE					ENTRANCE			LINE						FUSE		POWER	PHASE	INFORMATION		FEEDER N2XH
NAME	POWER			TYPE	FUSE	ELCB		NUM			SOCKET	LIGHT	CURRENT	TYPE						
	2220 W	ILLUM.P(W)	420	MDT	20 A MCB			1	A	1		9	10	MCB	420					3x2,5N2XH
								2	P	1		5	16	MCB	1800					3x2,5N2XH
		SOC.P(W)	1800																	
TOTAL					2220 W						0	14			2220	R	S	T	RST	
																0	0	0	0	

D3-ZIT-1.7\D3-ZIT-1.8\D3-ZIT-1.9\D3-ZIT-1.10

TABLE					ENTRANCE			LINE						FUSE		POWER	PHASE	INFORMATION	FEEDER N2XH
NAME	POWER			TYPE	FUSE	ELCB		NUM			SOCKET	LIGHT	CURRENT	TYPE					
C3-ZIT-1	43010 W	ILLUM.P(W)		MDT.	3x 63 A MCCB	4x 63A ELCB (300mA)	4x25 ELCB	1	A	1		6	10	MCB	120	S			3x2,5N2XH
								2	A	2		8	10	MCB	320	T			3x2,5N2XH
								3	A	3		5	10	MCB	200	R			3x2,5N2XH
								4	A	4		21	3x10	MCB	840	RST			5x2,5N2XH
								5	A	5		6	10	MCB	480	S			3x2,5N2XH
								6	A	6		6	10	MCB	240	T			3x2,5N2XH
								7	A	7		6	10	MCB	480	T			3x2,5N2XH
								8	A	8		7	10	MCB	520	T			3x2,5N2XH
								9	A	9		12	3x10	MCB	960	RST			5x2,5N2XH
								10	A	10		8	10	MCB	240	R			3x2,5N2XH
								11	A	11		13	10	MCB	390	S			3x2,5N2XH
								12	A	12		11	10	MCB	330	T			3x2,5N2XH
								13	A	13			10	MCB			Auxilary		3x2,5N2XH
							4x25 ELCB	14	P	1			16	MCB	2000	T	Hand dry machine		3x2,5N2XH
								15	P	2	3		16	MCB	900	S			3x2,5N2XH
								16	P	3			16	MCB	2000	S	Hand dry machine		3x2,5N2XH
								17	P	4	4		16	MCB	1200	R			3x2,5N2XH
								18	P	5	2		16	MCB	600	S			3x2,5N2XH
								19	P	6			16	MCB			Auxilary		3x2,5N2XH
								20	F	1	6		16	MCB	600	T			3x2,5N2XH
								21	F	2	6		16	MCB	600	S			3x2,5N2XH
								22	F	3	5		16	MCB	500	T			3x2,5N2XH
								23	F	4	7		16	MCB	700	T			3x2,5N2XH
							4x25	24	O	1			25	MCB	3930	R	C3-ZIT-1.1		3X6/31m
								25	O	2			25	MCB	3930	S	C3-ZIT-1.2		3X6/30m
								26	O	3			3x25	MCB	6800	RST	C3-ZIT-1.3		5X4/8m
							4x25	27	O	4			25	MCB	3420	T	C3-ZIT-1.4		3X4/15m
								28	O	5			25	MCB	3420	R	C3-ZIT-1.5		3X6/40m
							4x25	29	O	6			3x25	MCB	7290	RST	C3-ZIT-1.6		5X4/46m
TOTAL					43010 W						33	109			43010	R	S	T	RST
																8990	9020	9110	15890

TABLE					ENTRANCE			LINE					FUSE		POWER	PHASE	INFORMATION			FEEDER N2XH
NAME	POWER			TYPE	FUSE	ELCB		NUM			SOCKET	LIGHT	CURRENT	TYPE						
C3-ZIT-1.1/C3-ZIT-1.2	3930 W	ILLUM.P(W)	630	MDT	20 A MCB			1	A	1		9	10	MCB	630					3x2,5N2XH
								2	P	1	4		16	MCB	1200					3x2,5N2XH
								3	P	2	4		16	MCB	1200					3x2,5N2XH
								4	P	3	3		16	MCB	900					3x2,5N2XH
		SOC.P(W)	3300																	
TOTAL					3930 W						11	9			3930	R	S	T	RST	
																0	0	0	0	

TABLE					ENTRANCE			LINE					FUSE		POWER	PHASE	INFORMATION			FEEDER N2XH
NAME	POWER			TYPE	FUSE	ELCB		NUM			SOCKET	LIGHT	CURRENT	TYPE						
C3-ZIT-1.3	6800 W	ILLUM.P(W)	1400	MDT	3x 20 A MCB			1	A	1		6	10	MCB	420	T				3x2,5N2XH
								2	A	2		8	10	MCB	560	T				3x2,5N2XH
								3	A	3		6	10	MCB	420	S				3x2,5N2XH
								4	P	1	4		16	MCB	1200	R				3x2,5N2XH
								5	P	2	4		16	MCB	1200	S				3x2,5N2XH
								6	P	3	4		16	MCB	1200	T				3x2,5N2XH
								7	P	4	3		16	MCB	900	R				3x2,5N2XH
								8	P	5	3		16	MCB	900	S				3x2,5N2XH
		SOC.P(W)	5400																	
TOTAL					6800 W						18	20			6800	R	S	T	RST	
																2100	2520	2180	0	

TABLE					ENTRANCE			LINE					FUSE		POWER	PHASE	INFORMATION		FEEDER N2XH
NAME	POWER			TYPE	FUSE	ELCB		NUM			SOCKET	LIGHT	CURRENT	TYPE					
	3420 W	ILLUM.P(W)	1620	MDT	20 A MCB			1	A	1		8	10	MCB	320				3x2,5N2XH
								2	A	2		7	10	MCB	490				3x2,5N2XH
								3	A	3		7	10	MCB	490				3x2,5N2XH
								4	A	4		8	10	MCB	320				3x2,5N2XH
		SOC.P(W)	1800					5	P	1	4		16	MCB	1200				3x2,5N2XH
								6	P	2	2		16	MCB	600				3x2,5N2XH
TOTAL					3420 W						6	30			3420	R	S	T	RST
																0	0	0	0

C3-ZIT-1.4\C3-ZIT-1.5

TABLE					ENTRANCE			LINE					FUSE		POWER	PHASE	INFORMATION		FEEDER N2XH
NAME	POWER			TYPE	FUSE	ELCB		NUM			SOCKET	LIGHT	CURRENT	TYPE					
C3-ZIT-1.6	7290 W	ILLUM.P(W)	1790	MDT	3x 20 A MCB			1	A	1		7	10	MCB	280	R			3x2,5N2XH
								2	A	2		4	10	MCB	160	S			3x2,5N2XH
								3	A	3		15	10	MCB	450	R			3x2,5N2XH
								4	A	4		15	10	MCB	450	S			3x2,5N2XH
								5	A	5		15	10	MCB	450	T			3x2,5N2XH
								6	A	6			10	MCB			Auxilary		3x2,5N2XH
		SOC.P(W)	5500					7	P	1	5		16	MCB	1500	S			3x2,5N2XH
								8	P	2			16	MCB	2000	T	Hand dry machine		3x2,5N2XH
								9	P	3			16	MCB	2000	R	Hand dry machine		3x2,5N2XH
								10	P	4			16	MCB			Auxilary		
TOTAL					7290 W						5	56			7290	R	S	T	RST
																2730	2110	2450	0

TABLE					ENTRANCE			LINE						FUSE		POWER	PHASE		INFORMATION		FEEDER N2XH
NAME	POWER			TYPE	FUSE	ELCB		NUM				SOCKET	LIGHT	CURRENT	TYPE						
C3-ZIT-2	31640 W			MDT	3x 50 A MCCB	4x 50A ELCB (300mA)	4x25 ELCB	1	A	1			6	10	MCB	240	S				3x2,5N2XH
								2	A	2			34	3x10	MCB	1360	RST				5x2,5N2XH
								3	A	3			6	10	MCB	240	T				3x2,5N2XH
								4	A	4			16	3x10	MCB	1280	RST				5x2,5N2XH
								5	A	5			7	10	MCB	520	R				3x2,5N2XH
								6	A	6			6	10	MCB	480	R				3x2,5N2XH
								7	A	7			8	10	MCB	320	R				3x2,5N2XH
								8	A	8			15	10	MCB	390	S				3x2,5N2XH
								9	A	9				10	MCB	450	T				3x2,5N2XH
								10	A	10				10	MCB			Auxilary			3x2,5N2XH
							4x25 ELCB	11	P	1	5			16	MCB	1500	T				3x2,5N2XH
								12	P	2	4			16	MCB	1200	T				3x2,5N2XH
								13	P	3				16	MCB	2000	T	Hand dry machine			3x2,5N2XH
								14	P	4	2			16	MCB	600	R				3x2,5N2XH
								15	P	5				16	MCB	2000	S	Hand dry machine			3x2,5N2XH
								16	P	6				16	MCB			Auxilary			3x2,5N2XH
								17	F	1	4			16	MCB	400	T				3x2,5N2XH
								18	F	2	6			16	MCB	600	R				3x2,5N2XH
								19	F	3	3			16	MCB	300	T				3x2,5N2XH
							4X25	20	O	1				25	MCB	3420	R	C3-ZIT-2.1			3x4/20m
								21	O	2				25	MCB	3420	S	C3-ZIT-2.2			3x4/20m
							4X25	22	O	3				3x25	MCB	5460	RST	C3-ZIT-2.3			5x4/11m
								23	O	4				3x25	MCB	5460	RST	C3-ZIT-2.4			5x4/10m
TOTAL					31640 W							24	98			31640	R	S	T		RST
																	5940	6050	6090		13560

TABLE					ENTRANCE			LINE				FUSE						
NAME	POWER			TYPE	FUSE	ELCB		NUM		SOCKET	LIGHT	CURRENT	TYPE	POWER	PHASE	INFORMATION		FEEDER N2XH
D2-ZIT-1	66670 W	ILLUM.P(W)	11430	MDT	3x 100 A MCCB	4x 100A ELCB (300mA)	4x25 ELCB	1	A1		6	10	MCB	240	R			3x2,5N2XH
								2	A2		4	10	MCB	240	S			3x2,5N2XH
								3	A3		7	10	MCB	280	R			3x2,5N2XH
								4	A4		4	10	MCB	240	S			3x2,5N2XH
								5	A5		10	10	MCB	400	R			3x2,5N2XH
								6	A6		10	10	MCB	400	T			3x2,5N2XH
								7	A7		26	3x10	MCB	1960	RST			5x2,5N2XH
								8	A8		5	10	MCB	150	R			3x2,5N2XH
								9	A9		10	10	MCB	400	T			3x2,5N2XH
								10	A10		46	3x10	MCB	1840	RST			5x2,5N2XH
								11	A11		4	10	MCB	240				3x2,5N2XH
								12	A12		28	10	MCB	840				3x2,5N2XH
								13	A13		14	10	MCB	420				3x2,5N2XH
								14	A14		28	10	MCB	840				3x2,5N2XH
								15	A15		14	10	MCB	420				3x2,5N2XH
								16	A16		28	10	MCB	840				3x2,5N2XH
							4x25 ELCB	17	A17		14	10	MCB	420				3x2,5N2XH
								18	A18		28	10	MCB	840				3x2,5N2XH
								19	A19		14	10	MCB	420				3x2,5N2XH
								20	A20			10	MCB			Auxilary		3x2,5N2XH
								21	P1	2		16	MCB	600	T			3x2,5N2XH
								22	P2			16	MCB	2000	S	Hand dry machine		3x2,5N2XH
								23	P3			16	MCB	2000	R	Hand dry machine		3x2,5N2XH
								24	P4	2		16	MCB	600	S			3x2,5N2XH
								25	P5			16	MCB	2000	T	Hand dry machine		3x2,5N2XH
								26	P6			16	MCB	2000	R	Hand dry machine		3x2,5N2XH
							4x25 ELCB	27	P7	3		16	MCB	900	T			3x2,5N2XH
								28	P8	3		16	MCB	900	S			3x2,5N2XH
								29	P9	4		16	MCB	1200	T			3x2,5N2XH
								30	P10	4		16	MCB	1200	S			3x2,5N2XH
								31	P11			16	MCB			Auxilary		3x2,5N2XH
								32	F1	6		16	MCB	600	R			3x2,5N2XH
								33	F2	6		16	MCB	600	S			3x2,5N2XH
								34	F3	7		16	MCB	700	T			3x2,5N2XH
								35	F4	5		16	MCB	500	R			3x2,5N2XH
								36	F5	5		16	MCB	500	S			3x2,5N2XH
		SOC.P	13400					37	O1			3x25	MCB	6760	RST	D2-ZIT-1.1		5X4/30m
							4x2	38	O2			3x25	MCB	6760	RST	D2-ZIT-1.2		5X4/31m
								39	O3			3x25	MCB	5950	RST	D2-ZIT-1.3		5X4/9m
							4x2	40	O4			3x25	MCB	6760	RST	D2-ZIT-1.4		5X4/10m
								41	O5			3x25	MCB	5950	RST	D2-ZIT-1.5		5X4/30m
							4x25 ELCB	42	O6			3x25	MCB	6760	RST	D2-ZIT-1.6		5X4/31m
TOTAL					66670 W					47	300			66670	R	S	T	RST
															6170	6280	6200	42740

TABLE					ENTRANCE			LINE					FUSE		POWER	PHASE	INFORMATION		FEEDER N2XH
NAME	POWER			TYPE	FUSE	ELCB		NUM			SOCKET	LIGHT	CURRENT	TYPE					
	6760 W	ILLUM.P(W)	1660	MDT	3x 20 A MCB			1	A	1		6	10	MCB	420	R			3x2,5N2XH
								2	A	2		6	10	MCB	420	S			3x2,5N2XH
								3	A	3		5	10	MCB	200	S			3x2,5N2XH
								4	A	4		6	10	MCB	420	R			3x2,5N2XH
								5	A	5		5	10	MCB	200	S			3x2,5N2XH
		SOC.P(W)	5100					6	P	1	4		16	MCB	1200	T			3x2,5N2XH
								7	P	2	5		16	MCB	1500	R			3x2,5N2XH
								8	P	3	4		16	MCB	1200	S			3x2,5N2XH
								9	P	4	4		16	MCB	1200	T			3x2,5N2XH
TOTAL					6760 W						17	28			6760	R	S	T	RST
																2340	2020	2400	0

D2-ZIT-1.1\D2-ZIT-1.2\D2-ZIT-1.4\D2-ZIT-1.6

TABLE					ENTRANCE			LINE					FUSE		POWER	PHASE	INFORMATION		FEEDER N2XH
NAME	POWER			TYPE	FUSE	ELCB		NUM			SOCKET	LIGHT	CURRENT	TYPE					
D2-ZIT-1.3\D2-ZIT-1.5	5950 W	ILLUM.P(W)	1450	MDT	3x 20 A MCB			1	A	1		9	10	MCB	630	R			3x2,5N2XH
								2	A	2		5	10	MCB	200	T			3x2,5N2XH
								3	A	3		6	10	MCB	420	T			3x2,5N2XH
								4	A	4		5	10	MCB	200	R			3x2,5N2XH
								5	P	1	4		16	MCB	1200	R			3x2,5N2XH
		SOC.P(W)	4500					6	P	2	3		16	MCB	900	S			3x2,5N2XH
								7	P	3	4		16	MCB	1200	T			3x2,5N2XH
								8	P	4	4		16	MCB	1200	S			3x2,5N2XH
TOTAL					5950 W						15	25			5950	R	S	T	RST
																2030	2100	1820	0

TABLE					ENTRANCE			LINE					FUSE		POWER	PHASE	INFORMATION		FEEDER N2XH
NAME	POWER			TYPE	FUSE	ELCB		NUM			SOCKET	LIGHT	CURRENT	TYPE					
D2-ZIT-2	61330 W	ILLUM.P(W)		MDT	100 A MCCB	4X100 ELCB (300mA)	25	1	O	1			3x25	MCB	7570	RST	D2-ZIT-2.1		5X4/51m
							25	2	O	2			3x25	MCB	5950	RST	D2-ZIT-2.2		5X4 /50m
								3	O	3			3x25	MCB	6760	RST	D2-ZIT-2.3		5X4 /26m
							25	4	O	4			3x25	MCB	6760	RST	D2-ZIT-2.4		5X4 /25m
							25	5	O	5			3x32	MCCB	17850	RST	D2-ZIT-2.5		5X4 /20m
		SOC.P(W)					25	6	O	6			3x25	MCB	10640	RST	D2-ZIT-2.6		5X4 /27m
								7	O	7			3x25	MCB	5800	RST	D2-ZIT-2.7		5X4 /20m
								8	O	8				MCB			Auxilary		3X4N2XH
TOTAL					61330 W						0	0			61330	R	S	T	RST
																0	0	0	61330

TABLE					ENTRANCE			LINE					FUSE		POWER	PHASE	INFORMATION		FEEDER N2XH
NAME	POWER			TYPE	FUSE	ELCB		NUM			SOCKET	LIGHT	CURRENT	TYPE					
D2-ZIT-2.1	7570 W	ILLUM.P(W)	1870	MDT	3x 20 A MCB			1	A	1		6	10	MCB	420	R			3x2,5N2XH
								2	A	2		6	10	MCB	630	R			3x2,5N2XH
								3	A	3		5	10	MCB	200	T			3x2,5N2XH
								4	A	4		6	10	MCB	420	R			3x2,5N2XH
								5	A	5		5	10	MCB	200	S			3x2,5N2XH
		SOC.P(W)	5700					6	P	1	4		16	MCB	1200	T			3x2,5N2XH
								7	P	2	4		16	MCB	1200	R			3x2,5N2XH
								8	P	3	3		16	MCB	900	S			3x2,5N2XH
								9	P	4	4		16	MCB	1200	T			3x2,5N2XH
								10	P	5	4		16	MCB	1200	S			3x2,5N2XH
TOTAL					7570 W						19	28			7570	R	S	T	RST
																2670	2300	2600	0

TABLE					ENTRANCE			LINE					FUSE		POWER	PHASE	INFORMATION		FEEDER N2XH
NAME	POWER			TYPE	FUSE	ELCB		NUM			SOCKET	LIGHT	CURRENT	TYPE					
D2-ZIT-2.2	5950 W	ILLUM.P(W)	1450	MDT	3x 20 A MCB			1	A	1		9	10	MCB	630	R			3x2,5N2XH
								2	A	2		5	10	MCB	200	T			3x2,5N2XH
								3	A	3		6	10	MCB	420	T			3x2,5N2XH
								4	A	4		5	10	MCB	200	R			3x2,5N2XH
								5	P	1	4		16	MCB	1200	R			3x2,5N2XH
		SOC.P(W)	4500					6	P	2	4		16	MCB	1200	T			3x2,5N2XH
								7	P	3	3		16	MCB	900	S			3x2,5N2XH
								8	P	4	4		16	MCB	1200	S			3x2,5N2XH
TOTAL					5950 W						15	25			5950	R	S	T	RST
																2030	2100	1820	0

TABLE					ENTRANCE			LINE					FUSE		POWER	PHASE	INFORMATION		FEEDER N2XH
NAME	POWER			TYPE	FUSE	ELCB		NUM			SOCKET	LIGHT	CURRENT	TYPE					
D2-ZIT-2.3\D2-ZIT-2.4	6760 W	ILLUM.P(W)	1660	MDT	3x 20 A MCB			1	A	1		6	10	MCB	420	R			3x2,5N2XH
								2	A	2		6	10	MCB	420	S			3x2,5N2XH
								3	A	3		5	10	MCB	200	R			3x2,5N2XH
								4	A	4		6	10	MCB	420	R			3x2,5N2XH
								5	A	5		5	10	MCB	200	S			3x2,5N2XH
		SOC.P(W)	5100					6	P	1	4		16	MCB	1200	T			3x2,5N2XH
								7	P	2	4		16	MCB	1200	R			3x2,5N2XH
								8	P	3	5		16	MCB	1500	S			3x2,5N2XH
								9	P	4	4		16	MCB	1200	T			3x2,5N2XH
TOTAL					6760 W						17	28			6760	R	S	T	RST
																2240	2120	2400	0

TABLE					ENTRANCE			LINE					FUSE		POWER	PHASE	INFORMATION		FEEDER N2XH
NAME	POWER			TYPE	FUSE	ELCB		NUM			SOCKET	LIGHT	CURRENT	TYPE					
D2-ZIT-2.5	17850 W	ILLUM.P(W)	7550	MDT	3x 25 A MCB		4x 25A ELCB	1	A	1		16	3x10	MCB	1180	RST			5x2,5N2XH
								2	A	2		10	10	MCB	400	S			3x2,5N2XH
								3	A	3		7	10	MCB	280	R			3x2,5N2XH
								4	A	4		10	10	MCB	400	T			3x2,5N2XH
								5	A	5		6	10	MCB	240	R			3x2,5N2XH
								6	A	6		34	3x10	MCB	1360	RST			5x2,5N2XH
								7	A	7		4	10	MCB	240	R			3x2,5N2XH
								8	A	8		4	10	MCB	240	S			3x2,5N2XH
								9	A	9		6	10	MCB	240	R			3x2,5N2XH
								10	A	10		18	10	MCB	540	T			3x2,5N2XH
								11	A	11		27	10	MCB	810	R			3x2,5N2XH
								12	A	12		27	10	MCB	810	S			3x2,5N2XH
								13	A	13		27	10	MCB	810	T			3x2,5N2XH
		SOC.P	10300				4x 25A ELCB	14	A	14			10	MCB			Auxilary		3x2,5N2XH
								15	P	1	4		16	MCB	1200	R			3x2,5N2XH
								16	P	2	3		16	MCB	900	S			3x2,5N2XH
								17	P	3			16	MCB	2000	T	Hand dry machine		3x2,5N2XH
								18	P	4			16	MCB	2000	S	Hand dry machine		3x2,5N2XH
								19	P	5	3		16	MCB	900	T			3x2,5N2XH
								20	P	6	4		16	MCB	1200	R			3x2,5N2XH
								21	P	7			16	MCB			Auxilary		3x2,5N2XH
								22	F	1	5		16	MCB	500	R			3x2,5N2XH
								23	F	2	6		16	MCB	600	S			3x2,5N2XH
								24	F	3	5		16	MCB	500	T			3x2,5N2XH
								25	F	4	5		16	MCB	500	R			3x2,5N2XH
TOTAL					17850 W						35	196			17850	R	S	T	RST
																5210	4950	5150	2540

TABLE					ENTRANCE			LINE						FUSE		POWER	PHASE	INFORMATION		FEEDER N2XH
NAME	POWER			TYPE	FUSE	ELCB		NUM			SOCKET	LIGHT	CURRENT	TYPE						
D2-ZIT-2.6	10640 W	ILLUM.P(W)	1340	MDT	3x 20 A MCB		I	1	A	1		6	10	MCB	420	R				3x2,5N2XH
								2	A	2		6	10	MCB	240	S				3x2,5N2XH
								3	A	3		9	10	MCB	180	T				3x2,5N2XH
								4	A	4		6	10	MCB	220	R				3x2,5N2XH
								5	A	5		7	10	MCB	280	T				3x2,5N2XH
								6	A	6			10	MCB			Auxilary			3x2,5N2XH
		SOC.P	8400					7	P	1	5		16	MCB	1500	S				3x2,5N2XH
								8	P	2	3		16	MCB	900	T				3x2,5N2XH
								9	P	3			16	MCB	2000	R	Hand dry machine			3x2,5N2XH
								10	P	4			16	MCB	2000	T	Hand dry machine			3x2,5N2XH
							II	11	P	5			16	MCB	2000	S	Hand dry machine			3x2,5N2XH
								12	P	6			16	MCB			Auxilary			3x2,5N2XH
								13	F	1	4		16	MCB	400	R				3x2,5N2XH
								14	F	2	5		16	MCB	500	R				3x2,5N2XH
TOTAL					10640 W						17	34			10640	R	S	T		RST
																3540	3740	3360		0

TABLE					ENTRANCE			LINE						FUSE		POWER	PHASE	INFORMATION		FEEDER N2XH
NAME	POWER			TYPE	FUSE	ELCB		NUM			SOCKET	LIGHT	CURRENT	TYPE						
D2-ZIT-2.7	5800 W	ILLUM.P(W)	4600	MDT	3x 20 A MCB		I	1	A	1		8	10	MCB	560	S				3x2,5N2XH
								2	A	2		13	10	MCB	780	S				3x2,5N2XH
								3	A	3		10	10	MCB	800	T				3x2,5N2XH
								4	A	4		13	10	MCB	780	R				3x2,5N2XH
								5	A	5		17	3x10	MCB	1020	RST				5x2,5N2XH
								6	A	6		6	10	MCB	360	T				3x2,5N2XH
								7	A	7		5	10	MCB	300	T				3x2,5N2XH
		SOC.P	900					8	A	8			10	MCB		S	Auxilary			3x2,5N2XH
								9	P	1	3		16	MCB	900	R				3x2,5N2XH
								10	P	2			16	MCB		R	Auxilary			3x2,5N2XH
							II	11	F	1	3		16	MCB	300	S				3x2,5N2XH
TOTAL					5800 W						6	72			5800	R	S	T		RST
																1680	1640	1460		1020

TABLE					ENTER			LINE					FUSE		POWER	PHASE	INFORMATION		FEEDER N2XH
NAME	POWER			TYPE	FUSE	ELCB		NO		SOCKET	LIGHT	CURRENT	TYPE						
A1-3IT-1	40360 W	LUM.POWER (W)		M.D.T	3x 63 A EMCB	4x 63 A ELCB (300mA)	4x25 ELCB	1	A 1		4	10	MCB	320	S				3x2,5N2XH
								2	A 2		27	3x10	MCB	2160	RST				5x2,5N2XH
								3	A 3		29	3x10	MCB	2220	RST				5x2,5N2XH
								4	A 4			10	MCB			AUX.			3x2,5N2XH
								5	P 1	3		16	MCB	900	T				3x2,5N2XH
								6	P 2			16	MCB			AUX.			3x2,5N2XH
								7	F 1	5		16	MCB	500	T				3x2,5N2XH
								8	O 1			25	MCB	1110	S	A1-3IT-1.1			3X4/30m
								9	O 2			25	MCB	1110	T	A1-3IT-1.2			3X4/33m
								10	O 3			25	MCB	1110	T	A1-3IT-1.3			3X4/36m
								11	O 4			25	MCB	1110	R	A1-3IT-1.4			3X4/39m
		SOCKET POWER (W)						12	O 5			25	MCB	1110	T	A1-3IT-1.5			3X4/42m
							4x25	13	O 6			3x25	MCB	6270	RST	A1-3IT-1.6			5X6/60m
								14	O 7			25	MCB	4160	RST	A1-3IT-1.7			5X6/70m
								15	O 8			25	MCB	3260	S	A1-3IT-1.8			3X4/33m
							4x25	16	O 9			3x25	MCB	15020	RST	A1-3IT-1.9			5X6/33m
TOTAL					40360 W					8	60			40360	R	S	T		RST
															1110	4690	4730		29830

TABLE					ENTER			LINE				FUSE		POWER	PHASE	INFORMATION		FEEDER N2XH
NAME	POWER			TYPE	FUSE	ELCB		NO		SOCKET	LIGHT	CURRENT	TYPE					
	1110 W	ILLUM. P(W)	210	M.D.T	20 A MCB			1	A 1		3	10	MCB	210				3x2,5N2XH
								2	P 1	3		16	MCB	900				3x2,5N2XH
		SOC.P.(W)	900															
TOTAL					1110 W					3	3			1110	R	S	T	RST
															0	0	0	0
A1-3IT-1.1\A1-3IT-1.2/A1-3IT-1.3/A1-3IT-1.4/A1-3IT-1.5																		

TABLE					ENTER			LINE				FUSE		POWER	PHASE	INFORMATION		FEEDER N2XH
NAME	POWER			TYPE	FUSE	ELCB		NO		SOCKET	LIGHT	CURRENT	TYPE					
A1-3IT-1.6	6270 W	ILLUM. P(W)	1470	M.D.T	20 A MCB			1	A 1		9	10	MCB	630	S			3x2,5N2XH
								2	A 2		6	10	MCB	420	R			3x2,5N2XH
								3	A 3		6	10	MCB	420	T			3x2,5N2XH
								4	P 1	5		16	MCB	1500	R			3x2,5N2XH
								5	P 2	5		16	MCB	1500	S			3x2,5N2XH
		SOC.P.(W)	4800					6	P 3	3		16	MCB	900	T			3x2,5N2XH
								7	P 4	3		16	MCB	900	T			3x2,5N2XH
TOTAL					6270 W					16	21			6270	R	S	T	RST
															1920	2130	2220	0

TABLE					ENTER			LINE				FUSE		POWER	PHASE	INFORMATION		FEEDER N2XH
NAME	POWER			TYPE	FUSE	ELCB		NO		SOCKET	LIGHT	CURRENT	TYPE					
A1-3IT-1.7	4160 W	ILLUM. P(W)	560	M.D.T	20 A MCB			1	A 1		8	10	MCB	560				3x2,5N2XH
								2	P 1	4		16	MCB	1200				3x2,5N2XH
								3	P 2	3		16	MCB	900				3x2,5N2XH
								4	P 3	5		16	MCB	1500				3x2,5N2XH
		SOC.P.(W)	3600															
TOTAL					4160 W					12	8			4160	R	S	T	RST
															0	0	0	0

TABLE					ENTER			LINE				FUSE		POWER	PHASE	INFORMATION		FEEDER N2XH
NAME	POWER			TYPE	FUSE	ELCB		NO		SOCKET	LIGHT	CURRENT	TYPE					
A1-3IT-1.8	3260 W	ILLUM. P(W)	560	M.D.T	20 A MCB			1	A 1		8	10	MCB	560				3x2,5N2XH
								2	P 1	5		16	MCB	1500				3x2,5N2XH
								3	P 2	4		16	MCB	1200				3x2,5N2XH
		SOC.P.(W)	2700															
TOTAL					3260 W					9	8			3260	R	S	T	RST
															0	0	0	0

TABLE					ENTER			LINE				FUSE		POWER	PHASE	INFORMATION		FEEDER N2XH
NAME	POWER			TYPE	FUSE	ELCB		NO		SOCKET	LIGHT	CURRENT	TYPE					
A1-3IT-1.9	15020 W	LUMINARY POWER (W)	6620	M.D.T	3x 20 A MCB		4x25 ELCB	1	A 1		7	10	MCB	280	S			3x2,5XN2XH
								2	A 2		7	10	MCB	140	T			3x2,5XN2XH
								3	A 3		4	10	MCB	80	R			3x2,5XN2XH
								4	A 4		4	10	MCB	240	T			3x2,5XN2XH
								5	A 5		13	3x10	MCB	520	RST			5x2,5XN2XH
								6	A 6		7	10	MCB	420	R			3x2,5XN2XH
								7	A 7		4	10	MCB	360	T			3x2,5XN2XH
								8	A 8		2	10	MCB	160	R			3x2,5XN2XH
								9	A 9		13	3x10	MCB	520	RST			5x2,5XN2XH
								10	A 10		17	3x10	MCB	1020	RST			5x2,5XN2XH
								11	A 11		17	3x10	MCB	1020	RST			5x2,5XN2XH
								12	A 12		7	10	MCB	420	T			3x2,5XN2XH
								13	A 13		10	10	MCB	600	R			3x2,5XN2XH
		SOCKET POWER (W)	8400				4x25 ELCB	14	A 14		6	10	MCB	360	S			3x2,5XN2XH
								15	A 15		8	10	MCB	480	T			3x2,5XN2XH
								16	A 16			10	MCB		R	AUX.		3x2,5XN2XH
								17	P 1			16	MCB	2000	T	H.D.M		3x2,5XN2XH
								18	P 2			16	MCB	2000	S	H.D.M		3x2,5XN2XH
								19	P 3	2		16	MCB	600	T			3x2,5XN2XH
								20	P 4	2		16	MCB	600	R			3x2,5XN2XH
								21	P 5	3		16	MCB	900	S			3x2,5XN2XH
								22	P 6	2		16	MCB	600	R			3x2,5XN2XH
								23	P 7			16	MCB		R	AUX.		3x2,5XN2XH
								24	F 1	6		16	MCB	600	R			3x2,5XN2XH
								25	P 1	6		16	MCB	600	R			3x2,5XN2XH
								26	P 2	5		16	MCB	500	S			3x2,5XN2XH
TOTAL					15020 W					26	126			15020	R	S	T	RST
															3660	4040	4240	3080

TABLE					ENTER			LINE				FUSE						
NAME	POWER			TYPE	FUSE	ELCB		NO		SOCKET	LIGHT	CURRENT	TYPE	POWER	PHASE	INFORMATION		FEEDER N2XH
A1-3IT-2	47250 W	LUM.POWER (W)		M.D.T	3x 63 A EMCB	4x 63 A ELCB (300mA)	4x25 ELCB	1	A 1		4	10	MCB	320	R			3x2,5N2XH
								2	A 2		27	3x10	MCB	2160	RST			5x2,5N2XH
								3	A 3		29	3x10	MCB	2220	RST			5x2,5N2XH
								4	A 4			10	MCB			AUX.		3x2,5N2XH
								5	P 1	3		16	MCB	900	S			3x2,5N2XH
								6	P 2			16	MCB			AUX.		3x2,5N2XH
								7	F 1	5		16	MCB	500	T			3x2,5N2XH
								8	O 1			25	MCB	1110	S	A1-3IT-2.1		3X4/30m
								9	O 2			25	MCB	1110	T	A1-3IT-2.2		3X4/33m
								10	O 3			25	MCB	1110	S	A1-3IT-2.3		3X4/36m
								11	O 4			25	MCB	1110	T	A1-3IT-2.4		3X4/39m
								12	O 5			25	MCB	1110	R	A1-3IT-2.5		3X4/42m
		SOCKET POWER (W)					4x25 ELCB	13	O 6			3x25	MCB	6270	RST	A1-3IT-2.6		5X4/57m
								14	O 7			3x25	MCB	6270	RST	A1-3IT-2.7		5X6/70m
								15	O 8			25	MCB	1110	R	A1-3IT-2.8		3X6/60m
								16	O 9			25	MCB	3860	RST	A1-3IT-2.9		3X4/33m
							4x25	17	O 10			3x32	EMCB	18090	RST	A1-3IT-2.10		5X16/33m
TOTAL					47250 W					8	60			47250	R	S	T	RST
															2540	3120	2720	38870

TABLE					ENTER			LINE				FUSE		POWER	PHASE	INFORMATION		FEEDER N2XH
NAME	POWER			TYPE	FUSE	ELCB		NO		SOCKET	LIGHT	CURRENT	TYPE					
	1110 W	ILLUM. P(W)	210	M.D.T	20 A MCB			1	A 1		3	10	MCB	210				3x2,5N2XH
								2	P 1	3		16	MCB	900				3x2,5N2XH
		SOC.P.(W)	900															
TOTAL					1110 W					3	3			1110	R	S	T	RST
															0	0	0	0
A1-3IT-2.1\A1-3IT-2.2/A1-3IT-2.3/A1-3IT-2.4/A1-3IT-2.5/A1-3IT-2.8																		

TABLE					ENTER			LINE				FUSE		POWER	PHASE	INFORMATION		FEEDER N2XH
NAME	POWER			TYPE	FUSE	ELCB		NO		SOCKET	LIGHT	CURRENT	TYPE					
A1-3IT-2.7	6270 W	ILLUM. P(W)	1470	M.D.T	3x 20 A MCB			1	A 1		6	10	MCB	420	S			3x2,5N2XH
								2	A 2		9	10	MCB	630	R			3x2,5N2XH
								3	A 3		6	10	MCB	420	T			3x2,5N2XH
								4	P 1	5		16	MCB	1500	R			3x2,5N2XH
								5	P 2	6		16	MCB	1800	S			3x2,5N2XH
		SOC.P.(W)	4800					6	P 3	5		16	MCB	1500	T			3x2,5N2XH
TOTAL					6270 W					16	21			6270	R	S	T	RST
															2130	2220	1920	0

TABLE					ENTER			LINE				FUSE		POWER	PHASE	INFORMATION		FEEDER N2XH
NAME	POWER			TYPE	FUSE	ELCB		NO		SOCKET	LIGHT	CURRENT	TYPE					
A1-3IT-2.6	6270 W	ILLUM. P(W)	1470	M.D.T	20 A MCB 3x			1	A 1		9	10	MCB	630	S			3x2,5N2XH
								2	A 2		6	10	MCB	420	R			3x2,5N2XH
								3	A 3		6	10	MCB	420	T			3x2,5N2XH
								4	P 1	5		16	MCB	1500	R			3x2,5N2XH
								5	P 2	5		16	MCB	1500	S			3x2,5N2XH
		SOC.P.(W)	4800					6	P 3	3		16	MCB	900	T			3x2,5N2XH
								7	P 4	3		16	MCB	900	T			3x2,5N2XH
TOTAL					6270 W					16	21			6270	R 1920	S 2130	T 2220	RST 0

TABLE					ENTER			LINE				FUSE		POWER	PHASE	INFORMATION		FEEDER N2XH
NAME	POWER			TYPE	FUSE	ELCB		NO		SOCKET	LIGHT	CURRENT	TYPE					
A1-3IT-2.9	3860 W	ILLUM. P(W)	560	M.D.T	20 A MCB			1	A 1		8	10	MCB	560				3x2,5N2XH
								2	P 1	5		16	MCB	1500				3x2,5N2XH
								3	P 2	3		16	MCB	900				3x2,5N2XH
								4	P 3	3		16	MCB	900				3x2,5N2XH
		SOC.P.(W)	3300															
TOTAL					3860 W					11	8			3860	R 0	S 0	T 0	RST 0

TABLE					ENTER			LINE				FUSE						
NAME	POWER			TYPE	FUSE	ELCB		NO		SOCKET	LIGHT	CURRENT	TYPE	POWER	PHASE	INFORMATION		FEEDER N2XH
A1-3IT-2.10	18090 W	LUMINARY POWER (W)	8890	M.D.T	3x 25 A MCB		4 x25 ELCB	1	A 1		7	10	MCB	280	T			3x2,5N2XH
								2	A 2		7	10	MCB	140	S			3x2,5N2XH
								3	A 3		4	10	MCB	80	T			3x2,5N2XH
								4	A 4		4	10	MCB	240	T			3x2,5N2XH
								5	A 5		13	3x10	MCB	520	RST			5x2,5N2XH
								6	A 6		7	10	MCB	420	R			3x2,5N2XH
								7	A 7		7	10	MCB	420	T			3x2,5N2XH
								8	A 8		2	10	MCB	160	R			3x2,5N2XH
								9	A 9		13	3x10	MCB	520	RST			5x2,5N2XH
								10	A 10		17	3x10	MCB	1020	RST			5x2,5N2XH
								11	A 11		17	3x10	MCB	1020	RST			5x2,5N2XH
								12	A 12		13	3x10	MCB	780	RST			5x2,5N2XH
								13	A 13		7	10	MCB	320	S			3x2,5N2XH
								14	A 14		10	10	MCB	600	S			3x2,5N2XH
								15	A 15		6	10	MCB	360	T			3x2,5N2XH
								16	A 16		8	10	MCB	480	R			3x2,5N2XH
		SOCKET POWER (W)	6700				4 x25 ELCB	17	A 17		3	10	MCB	90	S			3x2,5N2XH
								18	A 18		32	3x10	MCB	1280	RST			5x2,5N2XH
								19	A 19		4	10	MCB	160	S			3x2,5N2XH
								20	A 20			10	MCB			AUX.		3x2,5N2XH
								21	P 1			16	MCB	2000	R	H.D.M		3x2,5N2XH
								22	P 2			16	MCB	2000	S	H.D.M		3x2,5N2XH
								23	P 3	2		16	MCB	600	T			3x2,5N2XH
								24	P 4	2		16	MCB	600	R			3x2,5N2XH
								25	P 5	3		16	MCB	900	T			3x2,5N2XH
								26	P 6	2		16	MCB	600	T			3x2,5N2XH
								27	P 7			16	MCB			AUX.		3x2,5N2XH
								28	F 1	6		16	MCB	600	R			3x2,5N2XH
								29	F 2	6		16	MCB	600	S			3x2,5N2XH
								30	F 3	7		16	MCB	700	T			3x2,5N2XH
								31	F 4	6		16	MCB	600	R			3x2,5N2XH
TOTAL					18090 W					34	181			18090	R	S	T	RST
															4860	3910	4180	5140

TABLE					ENTER			LINE					FUSE		POWER	PHASE	INFORMATION		FEEDER N2XH
NAME	POWER			TYPE	FUSE	ELCB		NO		SOCKET	LIGHT	CURRENT	TYPE						
B2-3IT-1	57590 W			M.D.T	3x 80 A EMCB	4x 80A ELCB (300mA)	4x25 ELCB	1	A 1		6	10	MCB	240	R				3x2,5N2XH
								2	A 2		4	10	MCB	240	S				3x2,5N2XH
								3	A 3		7	10	MCB	280	T				3x2,5N2XH
								4	A 4		4	10	MCB	240	R				3x2,5N2XH
								5	A 5		6	10	MCB	360	S				3x2,5N2XH
								6	A 6		4	10	MCB	240	T				3x2,5N2XH
								7	A 7		10	10	MCB	400	R				3x2,5N2XH
								8	A 8		19	3x10	MCB	1520	RST				5x2,5N2XH
								9	A 9		10	10	MCB	400	S				3x2,5N2XH
								10	A 10		10	10	MCB	400	T				3x2,5N2XH
								11	A 11		38	3x10	MCB	1520	RST				5x2,5N2XH
								12	A 12		5	10	MCB	150	R				3x2,5N2XH
								13	A 13			10	MCB			AUX.			3x2,5N2XH
								14	P 1	2		16	MCB	600	S				3x2,5N2XH
							4X25 ELCB	15	P 2			16	MCB	2000	R	H.D.M			3x2,5N2XH
								16	P 3			16	MCB	2000	S	H.D.M			3x2,5N2XH
								17	P 4	2		16	MCB	600	R				3x2,5N2XH
								18	P 5			16	MCB	2000	T	H.D.M			3x2,5N2XH
								19	P 6			16	MCB	2000	R	H.D.M			3x2,5N2XH
								20	P 7	3		16	MCB	900	S				3x2,5N2XH
								21	P 8	3		16	MCB	900	T				3x2,5N2XH
								22	P 9	4		16	MCB	1200	S				3x2,5N2XH
								23	P 10	4		16	MCB	1200	T				3x2,5N2XH
								24	F 1			16	MCB			AUX.			3x2,5N2XH
								25	F 2	6		16	MCB	600	R				3x2,5N2XH
								26	F 3	6		16	MCB	600	S				3x2,5N2XH
								27	F 4	7		16	MCB	700	T				3x2,5N2XH
								28	F 5	6		16	MCB	600	T				3x2,5N2XH
							4x2:	29	O 1			3x25	MCB	5950	RST	B2-3IT-1.1			5X4/30m
								30	O 2			3x25	MCB	5950	RST	B2-3IT-1.2			5X4/31m
								31	O 3			3x25	MCB	5950	RST	B2-3IT-1.3			5X4/9m
								32	O 4			3x25	MCB	5950	RST	B2-3IT-1.4			5X4/10m
								33	O 5			3x25	MCB	5950	RST	B2-3IT-1.5			5X4/30m
								34	O 6			3x25	MCB	5950	RST	B2-3IT-1.6			5X4/31m
TOTAL					57590 W					43	123			57590	R 6230	S 6300	T 6320		RST 38740

TABLE					ENTER			LINE				FUSE		POWER	PHASE	INFORMATION			FEEDER N2XH
NAME	POWER			TYPE	FUSE	ELCB		NO		SOCKET	LIGHT	CURRENT	TYPE						
	5950 W	ILLUM. P(W)	1450	M.D.T.	3x 20 A MCB			1	A 1		9	10	MCB	630	R				3x2,5N2XH
								2	A 2		5	10	MCB	200	T				3x2,5N2XH
								3	A 3		6	10	MCB	420	T				3x2,5N2XH
								4	A 4		5	10	MCB	200	R				3x2,5N2XH
		SOC.P.(W)	4500					5	P 1	4		16	MCB	1200	R				3x2,5N2XH
								6	P 2	3		16	MCB	900	S				3x2,5N2XH
								7	P 3	4		16	MCB	1200	T				3x2,5N2XH
								8	P 4	4		16	MCB	1200	S				3x2,5N2XH
TOTAL					5950 W					15	25			5950	R 2030	S 2100	T 1820		RST 0
B2-3IT-1.1\B2-3IT-1.2\B2-3IT-1.3\B2-3IT-1.4\B2-3IT-1.5\B2-3IT-1.6																			

TABLE					ENTER			LINE				FUSE		POWER	PHASE	INFORMATION			FEEDER N2XH
NAME	POWER			TYPE	FUSE	ELCB		NO		SOCKET	LIGHT	CURRENT	TYPE						
B2-3IT-2	57390 W	ILLUM. P(W)		M.D.T	80 A EMCB	4x80 ELCB (300 mA)	4x25	1	O 1			3x25	MCB	5950	RST	B2-3IT-2.1			5x4/48m
								2	O 2			3x25	MCB	5950	RST	B2-3IT-2.2			5x4/47m
							4x25 #	3	O 3			3x25	MCB	5950	RST	B2-3IT-2.3			5x4/27m
								4	O 4			3x25	MCB	5950	RST	B2-3IT-2.4			5x4/26m
								5	O 8			25	MCB	2190	R	B2-3IT-2.8			3x6/55m
		SOC.P.(W)					25	6	O 5			3x25	MCB	14960	RST	B2-3IT-2.5			5x6/20m
							25	7	O 6			3x25	MCB	10640	RST	B2-3IT-2.6			5x4/27m
							25	8	O 7			3x25	MCB	5800	RST	B2-3IT-2.7			5x4/20m
TOTAL					57390 W					0	0			57390	R 2190	S 0	T 0		RST 55200

TABLE					ENTER			LINE				FUSE		POWER	PHASE	INFORMATION		FEEDER N2XH
NAME	POWER			TYPE	FUSE	ELCB		NO		SOCKET	LIGHT	CURRENT	TYPE					
	5950 W	ILLUM. P(W)	1450	M.D.T	3x 20 A MCB			1	A 1		9	10	MCB	630	R			3x2,5N2XH
								2	A 2		5	10	MCB	200	T			3x2,5N2XH
								3	A 3		6	10	MCB	420	T			3x2,5N2XH
								4	A 4		5	10	MCB	200	R			3x2,5N2XH
								5	P 1	4		16	MCB	1200	R			3x2,5N2XH
								6	P 2	4		16	MCB	1200	T			3x2,5N2XH
		SOC.P.(W)	4500					7	P 3	3		16	MCB	900	S			3x2,5N2XH
								8	P 4	4		16	MCB	1200	S			3x2,5N2XH
TOTAL					5950 W					15	25			5950	R	S	T	RST
															2030	2100	1820	0
B2-3IT-2.1\B2-3IT-2.2\B2-3IT-2.3\B2-3IT-2.4																		

TABLE					ENTER			LINE				FUSE							
NAME	POWER			TYPE	FUSE	ELCB		NO		SOCKET	LIGHT	CURRENT	TYPE	POWER	PHASE	INFORMATION			FEEDER N2XH
B2-3IT-2.5	14960 W	LUM. POW. (W)	4460	M.D.T	3x 20 A MCB		4x25 ELCB	1	A 1		4	10	MCB	160	S				3x2,5N2XH
								2	A 2		28	3x10	MCB	1120	RST				5x2,5N2XH
								3	A 3		7	10	MCB	280	T				3x2,5N2XH
								4	A 4		4	10	MCB	160	S				3x2,5N2XH
								5	A 5		6	10	MCB	240	S				3x2,5N2XH
								6	A 6		10	10	MCB	400	R				3x2,5N2XH
								7	A 7		16	3x10	MCB	1180	RST				5x2,5N2XH
								8	A 8		10	10	MCB	400	R				3x2,5N2XH
								9	A 9		5	10	MCB	200	S				3x2,5N2XH
								10	A 10		8	10	MCB	320	T				3x2,5N2XH
								11	A 11			10	MCB			AUX.			3x2,5N2XH
								12	P 1	3		16	MCB	900	T				3x2,5N2XH
		SOCKET POWER (W)	8500				4x25 ELCB	13	P 2	2		16	MCB	600	R				3x2,5N2XH
								14	P 3			16	MCB	2000	R	H.D.M			3x2,5N2XH
								15	P 4			16	MCB	2000	S	H.D.M			3x2,5N2XH
								16	P 5	4		16	MCB	1200	T				3x2,5N2XH
								17	P 6	3		16	MCB	900	S				3x2,5N2XH
								18	P 7	3		16	MCB	900	T				3x2,5N2XH
								19	P 8			16	MCB			AUX.			3x2,5N2XH
								20	F 1	4		16	MCB	400	R				3x2,5N2XH
								21	F 2	6		16	MCB	600	T				3x2,5N2XH
								22	F 3	6		16	MCB	600	S				3x2,5N2XH
								23	F 4	4		16	MCB	400	R				3x2,5N2XH
TOTAL					14960 W					35	98			14960	R	S	T		RST
															4200	4260	4200		2300

TABLE					ENTER			LINE				FUSE		POWER	PHASE	INFORMATION		FEEDER N2XH
NAME	POWER			TYPE	FUSE	ELCB		NO		SOCKET	LIGHT	CURRENT	TYPE					
B2-3IT-2.6	10640 W	LUM.POWER (W)	1340	M.D.T	3x 20 A MCB	4x 25A ELCB	I	1	A 1		6	10	MCB	420	R			3x2,5N2XH
								2	A 2		6	10	MCB	240	S			3x2,5N2XH
								3	A 3		9	10	MCB	180	T			3x2,5N2XH
								4	A 4		6	10	MCB	220	R			3x2,5N2XH
								5	A 5		7	10	MCB	280	T			3x2,5N2XH
								6	A 6			10	MCB			AUX.		3x2,5N2XH
		SOCKET POWER (W)	8400					7	P 1	5		16	MCB	1500	S			3x2,5N2XH
								8	P 2	3		16	MCB	900	T			3x2,5N2XH
								9	P 3			16	MCB	2000	R	H.D.M		3x2,5N2XH
								10	P 4			16	MCB	2000	T	H.D.M		3x2,5N2XH
							II	11	P 5			16	MCB	2000	S	H.D.M		3x2,5N2XH
								12	P 6			16	MCB			AUX.		3x2,5N2XH
								13	F 1	4		16	MCB	400	R			3x2,5N2XH
								14	F 2	5		16	MCB	500	R			3x2,5N2XH
								15										
TOTAL					10640 W					17	34			10640	R	S	T	RST
															3540	3740	3360	0

TABLE					ENTER			LINE				FUSE		POWER	PHASE	INFORMATION		FEEDER N2XH
NAME	POWER			TYPE	FUSE	ELCB		NO		SOCKET	LIGHT	CURRENT	TYPE					
B2-3IT-2.7	5800 W	LUM.POWER (W)	4600	M.D.T	3x 20 A MCB	4x 25A ELCB	I	1	A 1		8	10	MCB	560	S			3x2,5N2XH
								2	A 2		13	10	MCB	780	S			3x2,5N2XH
								3	A 3		10	10	MCB	800	T			3x2,5N2XH
								4	A 4		13	3x10	MCB	780	RST			5x2,5N2XH
								5	A 5		17	3x10	MCB	1020	RST			5x2,5N2XH
								6	A 6		6	10	MCB	360	T			3x2,5N2XH
								7	A 7		5	10	MCB	300	T			3x2,5N2XH
		SOCKET POWER (W)	900					8	A 8			10	MCB		S	AUX.		3x2,5N2XH
								9	P 1	3		16	MCB	900	R			3x2,5N2XH
								10	P 2			16	MCB		R	AUX.		3x2,5N2XH
							II	11	F 1	3		16	MCB	300	S			3x2,5N2XH
								12										
								13										
TOTAL				5800 W						6	72			5800	R	S	T	RST
															900	1640	1460	1800

TABLE					ENTER			LINE				FUSE		POWER	PHASE	INFORMATION		FEEDER N2XH
NAME	POWER			TYPE	FUSE	ELCB		NO		SOCKET	LIGHT	CURRENT	TYPE					
B2-3IT-2.8	2190 W	ILLUM. P (W)	690	M.D.T	20 A MCB			1	A 1		7	10	MCB	490				3x2,5N2XH
								2	A 2		5	10	MCB	200				3x2,5N2XH
								3	P 1	5		16	MCB	1500				3x2,5N2XH
		SOC.P. (W)	1500															
TOTAL				2190 W						5	12			2190	R	S	T	RST
															0	0	0	0

TABLE					ENTER			LINE				FUSE							
NAME	POWER			TYPE	FUSE	ELCB		NO		SOCKET	LIGHT	CURRENT	TYPE	POWER	PHASE	INFORMATION		FEEDER N2XH
B3-3IT-1	57800 W	LUMINARY POWER (W)		M.D.T	3x 80 A EMCB	4x 80A ELCB (300 mA)	4x25 ELCB	1	A 1		7	10	MCB	280	T			3x2,5N2XH
								2	A 2		4	10	MCB	240	S			3x2,5N2XH
								3	A 3		7	10	MCB	280	T			3x2,5N2XH
								4	A 4		4	10	MCB	240	T			3x2,5N2XH
								5	A 5		6	10	MCB	240	T			3x2,5N2XH
								6	A 6		4	10	MCB	240	T			3x2,5N2XH
								7	A 7		10	10	MCB	400	S			3x2,5N2XH
								8	A 8		30	3x10	MCB	2400	RST			5x2,5N2XH
								9	A 9		10	10	MCB	400	T			3x2,5N2XH
								10	A 10		5	10	MCB	200	R			3x2,5N2XH
								11	A 11		37	3x10	MCB	1480	RST			5x2,5N2XH
								12	A 12			10	MCB			AUX.		3x2,5N2XH
								13	P 1	2		16	MCB	600	S			3x2,5N2XH
							4X25 ELCB	14	P 2			16	MCB	2000	S			3x2,5N2XH
								15	P 3			16	MCB	2000	R			3x2,5N2XH
								16	P 4	2		16	MCB	600	T			3x2,5N2XH
		SOCKET POWER (W)						17	P 5			16	MCB	2000	T	H.D.M		3x2,5N2XH
								18	P 6			16	MCB	2000	R	H.D.M		3x2,5N2XH
								19	P 7	3		16	MCB	900	S			3x2,5N2XH
								20	P 8	3		16	MCB	900	R			3x2,5N2XH
								21	P 9	4		16	MCB	1200	T			3x2,5N2XH
								22	P 10	4		16	MCB	1200	S			3x2,5N2XH
								23	P 11			16	MCB			AUX.		3x2,5N2XH
								24	F 1	5		16	MCB	500	R			3x2,5N2XH
								25	F 2	6		16	MCB	600	S			3x2,5N2XH
								26	F 3	6		16	MCB	600	T			3x2,5N2XH
								27	F 4	6		16	MCB	600	R			3x2,5N2XH
							4x25	28	O 1			3x25	MCB	5950	RST	B3-3IT-1.1		5X4/30m
								29	O 2			3x25	MCB	5950	RST	B3-3IT-1.2		5X4/31m
								30	O 3			3x25	MCB	5950	RST	B3-3IT-1.3		5X4/9m
								31	O 4			3x25	MCB	5950	RST	B3-3IT-1.4		5X4/10m
								32	O 5			3x25	MCB	5950	RST	B3-3IT-1.5		5X4/30m
								33	O 6			3x25	MCB	5950	RST	B3-3IT-1.6		5X4/31m
TOTAL					57800 W					41	124			57800	R	S	T	RST
															6200	5940	6080	39580

TABLE					ENTER			LINE				FUSE		POWER	PHASE	INFORMATION			FEEDER N2XH
NAME	POWER			TYPE	FUSE	ELCB		NO		SOCKET	LIGHT	CURRENT	TYPE						
	5950 W	ILLUM. P(W)	1450	M.D.T	3x 20 A MCB			1	A 1		9	10	MCB	630	R				3x2,5N2XH
								2	A 2		5	10	MCB	200	T				3x2,5N2XH
								3	A 3		6	10	MCB	420	T				3x2,5N2XH
								4	A 4		5	10	MCB	200	R				3x2,5N2XH
								5	P 1	4		16	MCB	1200	R				3x2,5N2XH
		SOC.P.(W)	4500					6	P 2	3		16	MCB	900	S				3x2,5N2XH
								7	P 3	4		16	MCB	1200	T				3x2,5N2XH
								8	P 4	4		16	MCB	1200	S				3x2,5N2XH
TOTAL					5950 W					15	25			5950	R	S	T		RST
															2030	2100	1820		0

B3-3IT-1.1\B3-3IT-1.2\B3-3IT-1.3\B3-3IT-1.4\B3-3IT-1.5\B3-3IT-1.6

TABLE					ENTER			LINE				FUSE		POWER	PHASE	INFORMATION		FEEDER N2XH
NAME	POWER			TYPE	FUSE	ELCB		NO		SOCKET	LIGHT	CURRENT	TYPE					
C1-3IT-1	40950 W	LUMINARY POWER (W)		M.D.T.	3x 63 A EMCB	4x 63A ELCB (300mA)	4x25 ELCB	1	A 1		6	10	MCB	120	S			3x2,5N2XH
								2	A 2		8	10	MCB	320	R			3x2,5N2XH
								3	A 3		5	10	MCB	200	T			3x2,5N2XH
								4	A 4		21	3x10	MCB	840	RST			5x2,5N2XH
								5	A 5		6	10	MCB	480	S			3x2,5N2XH
								6	A 6		6	10	MCB	240	T			3x2,5N2XH
								7	A 7		6	10	MCB	480	T			3x2,5N2XH
								8	A 8		7	10	MCB	520	T			3x2,5N2XH
								9	A 9		12	3x10	MCB	960	RST			5x2,5N2XH
								10	A 10			10	MCB			AUX.		3x2,5N2XH
							4x25 ELCB	11	P 1			16	MCB	2000	T	H.D.M		3x2,5N2XH
								12	P 2	3		16	MCB	900	S			3x2,5N2XH
								13	P 3			16	MCB	2000	S	H.D.M		3x2,5N2XH
								14	P 4	4		16	MCB	1200	R			3x2,5N2XH
								15	P 5	2		16	MCB	600	S			3x2,5N2XH
		SOCKET POWER (W)						16	P 6			16	MCB			AUX.		3x2,5N2XH
								17	F 1	6		16	MCB	600	T			3x2,5N2XH
								18	F 2	6		16	MCB	600	S			3x2,5N2XH
								19	F 3	5		16	MCB	500	T			3x2,5N2XH
								20	F 4	7		16	MCB	700	T			3x2,5N2XH
							4x25	21	O 1			25	MCB	3930	R	C1-3IT-1.1		3X6/31m
								22	O 2			25	MCB	2730	S	C1-3IT-1.2		3X6/30m
								23	O 3			3x25	MCB	6800	RST	C1-3IT-1.3		5X4/8m
								24	O 4			25	MCB	3420	T	C1-3IT-1.4		3X4/15m
								25	O 5			25	MCB	3420	R	C1-3IT-1.5		3X6/40m
							4x25 ELC	26	O 6			3x25	MCB	5940	RST	C1-3IT-1.6		5X4/46m
								27	O 7			25	MCB	1450	S	C1-3IT-1.7		3x6/33m
TOTAL					40950 W					33	77			40950	R	S	T	RST
															8870	8880	8660	14540

TABLE					ENTER			LINE				FUSE		POWER	PHASE	INFORMATION		FEEDER N2XH
NAME	POWER			TYPE	FUSE	ELCB		NO		SOCKET	LIGHT	CURRENT	TYPE					
C1-3IT-1.1	3930 W	ILLUM. P(W)	630	M.D.T	20 A MCB			1	A 1		9	10	MCB	630				3x2,5N2XH
								2	P 1	4		16	MCB	1200				3x2,5N2XH
								3	P 2	4		16	MCB	1200				3x2,5N2XH
								4	P 3	3		16	MCB	900				3x2,5N2XH
		SOC.P.(W)	3300															
TOTAL					3930 W					11	9			3930	R	S	T	RST
															0	0	0	0

TABLE					ENTER			LINE				FUSE		POWER	PHASE	INFORMATION		FEEDER N2XH
NAME	POWER			TYPE	FUSE	ELCB		NO		SOCKET	LIGHT	CURRENT	TYPE					
C1-3IT-1.2	2730 W	ILLUM. P(W)	630	M.D.T	20 A MCB			1	A 1		9	10	MCB	630				3x2,5N2XH
								2	P 1	4		16	MCB	1200				3x2,5N2XH
								3	P 2	3		16	MCB	900				3x2,5N2XH
		SOC.P.(W)	2100															
TOTAL					2730 W					7	9			2730	R	S	T	RST
															0	0	0	0

TABLE					ENTER			LINE				FUSE								
NAME	POWER			TYPE	FUSE	ELCB		NO		SOCKET	LIGHT	CURRENT	TYPE	POWER	PHASE	INFORMATION			FEEDER NO
C1-3IT-1.3	6800 W	ILLUM. P(W)	1400	M.D.T	3x 20 A MCB			1	A 1		6	10	MCB	420	T				3x2,5N2XH
								2	A 2		8	10	MCB	560	T				3x2,5N2XH
								3	A 3		6	10	MCB	420	S				3x2,5N2XH
		SOC.P.(W)	5400					4	P 1	4		16	MCB	1200	R				3x2,5N2XH
								5	P 2	4		16	MCB	1200	S				3x2,5N2XH
								6	P 3	4		16	MCB	1200	T				3x2,5N2XH
								7	P 4	3		16	MCB	900	R				3x2,5N2XH
								8	P 5	3		16	MCB	900	S				3x2,5N2XH
TOTAL					6800 W					18	20			6800	R	S	T		RST
															2100	2520	2180		0

TABLE					ENTER			LINE				FUSE								
NAME	POWER			TYPE	FUSE	ELCB		NO		SOCKET	LIGHT	CURRENT	TYPE	POWER	PHASE	INFORMATION			FEEDER N2XH
	3420 W	ILLUM. P(W)	1620	M.D.T	20 A MCB			1	A 1		8	10	MCB	320					3x2,5N2XH
								2	A 2		7	10	MCB	490					3x2,5N2XH
								3	A 3		7	10	MCB	490					3x2,5N2XH
								4	A 4		8	10	MCB	320					3x2,5N2XH
		SOC.P.(W)	1800					5	P 1	4		16	MCB	1200					3x2,5N2XH
								6	P 2	2		16	MCB	600					3x2,5N2XH
TOTAL					3420 W					6	30			3420	R	S	T		RST
															0	0	0		0

C1-3IT-1.4\C1-3IT-1.5

TABLE					ENTER			LINE				FUSE		POWER	PHASE	INFORMATION			FEEDER N2XH
NAME	POWER			TYPE	FUSE	ELCB		NO		SOCKET	LIGHT	CURRENT	TYPE						
C1-3IT-1.6	5940 W	ILLUM. P(W)	440	M.D.T	3x 20 A MCB			1	A 1		7	10	MCB	280	R				3x2,5N2XH
								2	A 2		4	10	MCB	160	S				3x2,5N2XH
								3	A 3			10	MCB			AUX.			3x2,5N2XH
								4	A 4			10	MCB			AUX.			3x2,5N2XH
		SOC.P.(W)	5500					5	P 1	5		16	MCB	1500	R				3x2,5N2XH
								6	P 2			16	MCB	2000	T	H.D.M			3x2,5N2XH
								7	P 3			16	MCB	2000	S	H.D.M			3x2,5N2XH
TOTAL					5940 W					5	11			5940	R 1780	S 2160	T 2000		RST 0

TABLE					ENTER			LINE				FUSE		POWER	PHASE	INFORMATION			FEEDER N2XH
NAME	POWER			TYPE	FUSE	ELCB		NO		SOCKET	LIGHT	CURRENT	TYPE						
C1-3IT-1.7	1450 W	ILLUM. P(W)	850	M.D.T	20 A MCB			1	A 1		6	10	MCB	420					3x2,5N2XH
								2	A 2		7	10	MCB	430					3x2,5N2XH
								3	P 1	2		16	MCB	600					3x2,5N2XH
		SOC.P.(W)	600																
TOTAL					1450 W					2	13			1450	R 0	S 0	T 0		RST 0

TABLE					ENTER			LINE				FUSE						
NAME	POWER			TYPE	FUSE	ELCB		NO		SOCKET	LIGHT	CURRENT	TYPE	POWER	PHASE	INFORMATION		FEEDER N2XH
C1-3IT-2	30500 W			M.D.T	3x 50 A EMCB	4x 50A ELCB (300 mA)	4x25 ELCB	1	A 1		6	10	MCB	240	R			3x2,5N2XH
								2	A 2		34	3x10	MCB	1360	RST			5x2,5N2XH
								3	A 3		6	10	MCB	240	T			3x2,5N2XH
								4	A 4		16	3x10	MCB	1280	RST			5x2,5N2XH
								5	A 5		7	10	MCB	520	R			3x2,5N2XH
								6	A 6		6	10	MCB	480	T			3x2,5N2XH
								7	A 7		8	10	MCB	320	R			3x2,5N2XH
								8	A 8			10	MCB			AUX.		3x2,5N2XH
								9	P 1	4		16	MCB	1200	T			3x2,5N2XH
								10	P 2	4		16	MCB	1200	T			3x2,5N2XH
								11	P 3			16	MCB	2000	T	H.D.M		3x2,5N2XH
								12	P 4	2		16	MCB	600	R			3x2,5N2XH
								13	P 5			16	MCB	2000	S	H.D.M		3x2,5N2XH
								14	P 6			16	MCB			AUX.		3x2,5N2XH
								15	F 1	4		16	MCB	400	T			3x2,5N2XH
								16	F 2	6		16	MCB	600	R			3x2,5N2XH
								17	F 3	3		16	MCB	300	T			3x2,5N2XH
							4x25	18	O 1			25	MCB	3420	R	C1-3IT-2.1		3x4/20m
								19	O 2			25	MCB	3420	S	C1-3IT-2.2		3x4/20m
							4x25 ELCB	20	O 3			3x25	MCB	5460	RST	C1-3IT-2.3		5x4/11m
								21	O 4			3x25	MCB	5460	RST	C1-3IT-2.4		5x4/10m
TOTAL					30500 W					23	83			30500	R	S	T	RST
															5700	5420	5820	13560

TABLE					ENTER			LINE				FUSE		POWER	PHASE	INFORMATION		FEEDER N2XH
NAME	POWER			TYPE	FUSE	ELCB		NO		SOCKET	LIGHT	CURRENT	TYPE					
	3420 W	ILLUM. P(W)	1620	M.D.T	MCB 20 A			1	A 1		8	10	MCB	320				3x2,5N2XH
								2	A 2		7	10	MCB	490				3x2,5N2XH
								3	A 3		7	10	MCB	490				3x2,5N2XH
								4	A 4		8	10	MCB	320				3x2,5N2XH
								5	P 1	4		16	MCB	1200				3x2,5N2XH
		SOC.P.(W)	1800					6	P 2	2		16	MCB	600				3x2,5N2XH
TOTAL					3420 W					6	30			3420	R 0	S 0	T 0	RST 0
C1-3IT-2.1\C1-3IT-2.2																		

TABLE					ENTER			LINE				FUSE		POWER	PHASE	INFORMATION		FEEDER N2XH
NAME	POWER			TYPE	FUSE	ELCB		NO		SOCKET	LIGHT	CURRENT	TYPE					
C1-3IT-2.3\C1-3IT-2.4	5460 W	ILLUM. P(W)	1260	M.D.T	MCB 3x20 A			1	A 1		6	10	MCB	420	S			3x2,5N2XH
								2	A 2		6	10	MCB	420	R			3x2,5N2XH
								3	A 3		6	10	MCB	420	S			3x2,5N2XH
								4	P 1	4		16	MCB	1200	R			3x2,5N2XH
								5	P 2	4		16	MCB	1200	T			3x2,5N2XH
								6	P 3	3		16	MCB	900	T			3x2,5N2XH
		SOC.P.(W)	4200					7	P 4	3		16	MCB	900	S			3x2,5N2XH
TOTAL					5460 W					14	18			5460	R 1620	S 1740	T 2100	RST 0

TABLE					ENTER			LINE				FUSE		POWER	PHASE	INFORMATION		FEEDER N2XH
NAME	POWER			TYPE	FUSE	ELCB		NO		SOCKET	LIGHT	CURRENT	TYPE					
C3-3IT-1	40950 W	LUMINARY POWER (W)		M.D.T.	3x 63 A EMCB	4x 63A ELCB (300mA)	4x25 ELCB	1	A 1		6	10	MCB	120	S			3x2,5N2XH
								2	A 2		8	10	MCB	320	R			3x2,5N2XH
								3	A 3		5	10	MCB	200	T			3x2,5N2XH
								4	A 4		21	3x10	MCB	840	RST			5x2,5N2XH
								5	A 5		6	10	MCB	480	S			3x2,5N2XH
								6	A 6		6	10	MCB	240	T			3x2,5N2XH
								7	A 7		6	10	MCB	480	T			3x2,5N2XH
								8	A 8		7	10	MCB	520	T			3x2,5N2XH
								9	A 9		12	3x10	MCB	960	RST			5x2,5N2XH
								10	A 10			10	MCB			AUX.		3x2,5N2XH
							4x25 ELCB	11	P 1			16	MCB	2000	T	H.D.M		3x2,5N2XH
								12	P 2	3		16	MCB	900	S			3x2,5N2XH
								13	P 3			16	MCB	2000	S	H.D.M		3x2,5N2XH
								14	P 4	4		16	MCB	1200	R			3x2,5N2XH
								15	P 5	2		16	MCB	600	S			3x2,5N2XH
		SOCKET POWER (W)						16	P 6			16	MCB			AUX.		3x2,5N2XH
								17	F 1	6		16	MCB	600	T			3x2,5N2XH
								18	F 2	6		16	MCB	600	S			3x2,5N2XH
								19	F 3	5		16	MCB	500	T			3x2,5N2XH
								20	F 4	7		16	MCB	700	T			3x2,5N2XH
							4x25	21	O 1			25	MCB	3930	R	C3-3IT-1.1		3X6/31m
								22	O 2			25	MCB	2730	S	C3-3IT-1.2		3X6/30m
								23	O 3			3x25	MCB	6800	RST	C3-3IT-1.3		5X4/8m
							4x25	24	O 4			25	MCB	3420	T	C3-3IT-1.4		3X4/15m
								25	O 5			25	MCB	3420	R	C3-3IT-1.5		3X6/40m
							4x25 EL	26	O 6			3x25	MCB	5940	RST	C3-3IT-1.6		5X4/46m
								27	O 7			25	MCB	1450	S	C3-3IT-1.7		3x6/33m
TOTAL					40950 W					33	77			40950	R 8870	S 8880	T 8660	RST 14540

TABLE					ENTER			LINE				FUSE		POWER	PHASE	INFORMATION		FEEDER N2XH
NAME	POWER			TYPE	FUSE	ELCB		NO		SOCKET	LIGHT	CURRENT	TYPE					
C3-3IT-1.1	3930 W	ILLUM. P(W)	630	M.D.T	20 A MCB			1	A 1		9	10	MCB	630				3x2,5N2XH
								2	P 1	4		16	MCB	1200				3x2,5N2XH
								3	P 2	4		16	MCB	1200				3x2,5N2XH
								4	P 3	3		16	MCB	900				3x2,5N2XH
		SOC.P.(W)	3300															
TOTAL					3930 W					11	9			3930	R	S	T	RST
															0	0	0	0

TABLE					ENTER			LINE				FUSE		POWER	PHASE	INFORMATION		FEEDER N2XH
NAME	POWER			TYPE	FUSE	ELCB		NO		SOCKET	LIGHT	CURRENT	TYPE					
C3-3IT-1.2	2730 W	ILLUM. P(W)	630	M.D.T	20 A MCB			1	A 1		9	10	MCB	630				3x2,5N2XH
								2	P 1	4		16	MCB	1200				3x2,5N2XH
								3	P 2	3		16	MCB	900				3x2,5N2XH
		SOC.P.(W)	2100															
TOTAL					2730 W					7	9			2730	R	S	T	RST
															0	0	0	0

TABLE					ENTER			LINE				FUSE		POWER	PHASE	INFORMATION			FEEDER N2XH
NAME	POWER			TYPE	FUSE	ELCB		NO		SOCKET	LIGHT	CURRENT	TYPE						
C3-3IT-1.3	6800 W	ILLUM. P(W)	1400	M.D.T	3x 20 A MCB			1	A 1		6	10	MCB	420	T				3x2,5N2XH
								2	A 2		8	10	MCB	560	T				3x2,5N2XH
								3	A 3		6	10	MCB	420	S				3x2,5N2XH
								4	P 1	4		16	MCB	1200	R				3x2,5N2XH
								5	P 2	4		16	MCB	1200	S				3x2,5N2XH
								6	P 3	4		16	MCB	1200	T				3x2,5N2XH
								7	P 4	3		16	MCB	900	R				3x2,5N2XH
								8	P 5	3		16	MCB	900	S				3x2,5N2XH
		SOC.P.(W)	5400																
																		R	RST
TOTAL					6800 W					18	20			6800	2100	2520	2180	0	

TABLE					ENTER			LINE				FUSE		POWER	PHASE	INFORMATION			FEEDER N2XH
NAME	POWER			TYPE	FUSE	ELCB		NO		SOCKET	LIGHT	CURRENT	TYPE						
	3420 W	ILLUM. P(W)	1620	M.D.T	20 A MCB			1	A 1		8	10	MCB	320					3X2,5N2XH
								2	A 2		7	10	MCB	490					3X2,5N2XH
								3	A 3		7	10	MCB	490					3X2,5N2XH
								4	A 4		8	10	MCB	320					3X2,5N2XH
								5	P 1	4		16	MCB	1200					3X2,5N2XH
								6	P 2	2		16	MCB	600					3X2,5N2XH
		SOC.P.(W)	1800																
																		R	RST
TOTAL					3420 W					6	30			3420	0	0	0	0	

C3-3IT-1.4\C3-3IT-1.5

TABLE					ENTER			LINE				FUSE		POWER	PHASE	INFORMATION			FEEDER N2XH
NAME	POWER			TYPE	FUSE	ELCB		NO		SOCKET	LIGHT	CURRENT	TYPE						
C3-3IT-1.6	5940 W	ILLUM. P(W)	440	M.D.T	3x 20 A MCB			1	A 1		7	10	MCB	280	R				3x2,5N2XH
								2	A 2		4	10	MCB	160	S				3x2,5N2XH
								3	A 3			10	MCB			AUX.			3x2,5N2XH
								4	A 4			10	MCB			AUX.			3x2,5N2XH
								5	P 1	5		16	MCB	1500	R				3x2,5N2XH
		SOC.P.(W)	5500					6	P 2			16	MCB	2000	T	H.D.M			3x2,5N2XH
								7	P 3			16	MCB	2000	S	H.D.M			3x2,5N2XH
TOTAL					5940 W					5	11			5940	R	S	T		RST
															1780	2160	2000		0

TABLE					ENTER			LINE				FUSE		POWER	PHASE	INFORMATION			FEEDER N2XH
NAME	POWER			TYPE	FUSE	ELCB		NO		SOCKET	LIGHT	CURRENT	TYPE						
C3-3IT-1.7	1450 W	ILLUM. P(W)	850	M.D.T	20 A MCB			1	A 1		6	10	MCB	420					3x2,5N2XH
								2	A 2		7	10	MCB	430					3x2,5N2XH
								3	P 1	2		16	MCB	600					3x2,5N2XH
		SOC.P.(W)	600																
TOTAL					1450 W					2	13			1450	R	S	T		RST
															0	0	0		0

TABLE					ENTER			LINE					FUSE		POWER	PHASE	INFORMATION		FEEDER N2XH
NAME	POWER			TYPE	FUSE	ELCB		NO		SOCKET	LIGHT	CURRENT	TYPE						
C3-3IT-2	30500 W			M.D.T	3x 50 A EMCB	4x 50A ELCB	4x25 ELCB	1	A 1		6	10	MCB	240	R				3x2,5N2XH
								2	A 2		34	3x10	MCB	1360	RST				5x2,5N2XH
								3	A 3		6	10	MCB	240	T				3x2,5N2XH
								4	A 4		16	3x10	MCB	1280	RST				5x2,5N2XH
								5	A 5		7	10	MCB	520	R				3x2,5N2XH
								6	A 6		6	10	MCB	480	T				3x2,5N2XH
								7	A 7		8	10	MCB	320	R				3x2,5N2XH
								8	A 8			10	MCB			AUX.			3x2,5N2XH
								9	P 1	4		16	MCB	1200	T				3x2,5N2XH
								10	P 2	4		16	MCB	1200	T				3x2,5N2XH
								11	P 3			16	MCB	2000	T	H.D.M			3x2,5N2XH
								12	P 4	2		16	MCB	600	R				3x2,5N2XH
								13	P 5			16	MCB	2000	S	H.D.M			3x2,5N2XH
								14	P 6			16	MCB			AUX.			3x2,5N2XH
								15	F 1	4		16	MCB	400	T				3x2,5N2XH
								16	F 2	6		16	MCB	600	R				3x2,5N2XH
								17	F 3	3		16	MCB	300	T				3x2,5N2XH
							4x25	18	O 1			25	MCB	3420	R	C3-3IT-2.1			3x4/20m
								19	O 2			25	MCB	3420	S	C3-3IT-2.2			3x4/20m
							4x25 ELCB	20	O 3			3x25	MCB	5460	RST	C3-3IT-2.3			5x4/11m
								21	O 4			3x25	MCB	5460	RST	C3-3IT-2.4			5x4/10m
TOTAL				30500 W						23	83			30500	R	S	T		RST
															5700	5420	5820		13560

TABLE					ENTER			LINE				FUSE		POWER	PHASE	INFORMATION		FEEDER N2XH
NAME	POWER			TYPE	FUSE	ELCB		NO		SOCKET	LIGHT	CURRENT	TYPE					
	3420 W	ILLUM. P(W)	1620	M.D.T	20 A MCB			1	A 1		8	10	MCB	320				3x2,5N2XH
								2	A 2		7	10	MCB	490				3x2,5N2XH
								3	A 3		7	10	MCB	490				3x2,5N2XH
								4	A 4		8	10	MCB	320				3x2,5N2XH
								5	P 1	4		16	MCB	1200				3x2,5N2XH
		SOC.P.(W)	1800					6	P 2	2		16	MCB	600				3x2,5N2XH
TOTAL					3420 W					6	30			3420	R 0	S 0	T 0	RST 0
C3-3IT-2.1\C3-3IT-2.2																		

TABLE					ENTER			LINE				FUSE		POWER	PHASE	INFORMATION		FEEDER N2XH
NAME	POWER			TYPE	FUSE	ELCB		NO		SOCKET	LIGHT	CURRENT	TYPE					
C3-3IT-2.3\C3-3IT-2.4	5460 W	ILLUM. P(W)	1260	M.D.T	3x 20 A MCB			1	A 1		6	10	MCB	420	S			3x2,5N2XH
								2	A 2		6	10	MCB	420	R			3x2,5N2XH
								3	A 3		6	10	MCB	420	S			3x2,5N2XH
								4	P 1	4		16	MCB	1200	R			3x2,5N2XH
								5	P 2	4		16	MCB	1200	T			3x2,5N2XH
								6	P 3	3		16	MCB	900	T			3x2,5N2XH
		SOC.P.(W)	4200					7	P 4	3		16	MCB	900	S			3x2,5N2XH
TOTAL					5460 W					14	18			5460	R 1620	S 1740	T 2100	RST 0

TABLE					ENTER			LINE				FUSE							
NAME	POWER			TYPE	FUSE	ELCB		NO		SOCKET	LIGHT	CURRENT	TYPE	POWER	PHASE	INFORMATION		FEEDER NO
D2-3IT-1	61630 W	LUMINARY POWER (W)		M.D.T	3x 100 A EMCB	4x 100A ELCB (300mA)	4X25 ELCB	1	A 1		6	10	MCB	240	R			3x2,5N2XH
								2	A 2		4	10	MCB	240	S			3x2,5N2XH
								3	A 3		7	10	MCB	280	R			3x2,5N2XH
								4	A 4		4	10	MCB	240	S			3x2,5N2XH
								5	A 5		10	10	MCB	400	R			3x2,5N2XH
								6	A 6		10	10	MCB	400	T			3x2,5N2XH
								7	A 7		26	3x10	MCB	1960	RST			5x2,5N2XH
								8	A 8		5	10	MCB	150	R			3x2,5N2XH
								9	A 9		10	10	MCB	400	T			3x2,5N2XH
								10	A 10		46	3x10	MCB	1840	RST			5x2,5N2XH
								11	A 11		4	10	MCB	240	R			3x2,5N2XH
								12	A 12			10	MCB			AUX.		3x2,5N2XH
								13	P 1	2		16	MCB	600	T			3x2,5N2XH
								14	P 2			16	MCB	2000	S	H.D.M		3x2,5N2XH
							4X25 ELCB	15	P 3			16	MCB	2000	R	H.D.M		3x2,5N2XH
								16	P 4	2		16	MCB	600	S			3x2,5N2XH
								17	P 5			16	MCB	2000	T	H.D.M		3x2,5N2XH
								18	P 6			16	MCB	2000	R	H.D.M		3x2,5N2XH
		SOCKET POWER (W)						19	P 7	3		16	MCB	900	T			3x2,5N2XH
								20	P 8	3		16	MCB	900	S			3x2,5N2XH
								21	P 9	4		16	MCB	1200	T			3x2,5N2XH
								22	P 10	4		16	MCB	1200	S			3x2,5N2XH
								23	P 11			16	MCB			AUX.		3x2,5N2XH
								24	F 1	6		16	MCB	600	R			3x2,5N2XH
								25	F 2	6		16	MCB	600	S			3x2,5N2XH
								26	F 3	7		16	MCB	700	T			3x2,5N2XH
								27	F 4	5		16	MCB	500	R			3x2,5N2XH
								28	F 5	5		16	MCB	500	S			3x2,5N2XH
							25	29	O 1			3x25	MCB	6760	RST	D2-3IT-1.1		5X4/30m
							4x25	30	O 2			3x25	MCB	6760	RST	D2-3IT-1.2		5X4/31m
								31	O 3			3x25	MCB	5950	RST	D2-3IT-1.3		5X4/9m
								32	O 4			3x25	MCB	6760	RST	D2-3IT-1.4		5X4/10m
								33	O 5			3x25	MCB	5950	RST	D2-3IT-1.5		5X4/30m
							25	34	O 6			3x25	MCB	6760	RST	D2-3IT-1.6		5X4/31m
TOTAL					61630 W					47	132			61630	R	S	T	RST
															6410	6280	6200	42740

TABLE					ENTER			LINE				FUSE		POWER	PHASE	INFORMATION			FEEDER N2XH
NAME	POWER			TYPE	FUSE	ELCB		NO		SOCKET	LIGHT	CURRENT	TYPE						
	6760 W	ILLUM. P(W)	1660	M.D.T	3x 20 A MCB			1	A 1		6	10	MCB	420	R				3x2,5N2XH
								2	A 2		6	10	MCB	420	S				3x2,5N2XH
								3	A 3		5	10	MCB	200	S				3x2,5N2XH
								4	A 4		6	10	MCB	420	R				3x2,5N2XH
								5	A 5		5	10	MCB	200	S				3x2,5N2XH
		SOC.P.(W)	5100					6	P 1	4		16	MCB	1200	T				3x2,5N2XH
								7	P 2	5		16	MCB	1500	R				3x2,5N2XH
								8	P 3	4		16	MCB	1200	S				3x2,5N2XH
								9	P 4	4		16	MCB	1200	T				3x2,5N2XH
TOTAL					6760 W					17	28			6760	R	S	T		RST
															2340	2020	2400		0
D2-3IT-1.1\D2-3IT-1.2\D2-3IT-1.4\D2-3IT-1.6																			

TABLE					ENTER			LINE				FUSE		POWER	PHASE	INFORMATION			FEEDER NO
NAME	POWER			TYPE	FUSE	ELCB		NO		SOCKET	LIGHT	CURRENT	TYPE						
D2-3IT-1.3\D2-3IT-1.5	5950 W	ILLUM. P(W)	1450	M.D.T	3x 20 A MCB			1	A 1		9	10	MCB	630	R				3x2,5N2XH
								2	A 2		5	10	MCB	200	T				3x2,5N2XH
								3	A 3		6	10	MCB	420	T				3x2,5N2XH
								4	A 4		5	10	MCB	200	R				3x2,5N2XH
								5	P 1	4		16	MCB	1200	R				3x2,5N2XH
		SOC.P.(W)	4500					6	P 2	3		16	MCB	900	S				3x2,5N2XH
								7	P 3	4		16	MCB	1200	T				3x2,5N2XH
								8	P 4	4		16	MCB	1200	S				3x2,5N2XH
TOTAL					5950 W					15	25			5950	R	S	T		RST
															2030	2100	1820		0

TABLE					ENTER			LINE				FUSE		POWER	PHASE	INFORMATION		FEEDER N2XH
NAME	POWER			TYPE	FUSE	ELCB		NO		SOCKET	LIGHT	CURRENT	TYPE					
D2-3IT-2	58360 W	ILLUM. P(W)		M.D.T	80 A EMCB	4X80 ELCB (300mA)	25	1	O 1			3x25	MCB	7570	RST	D2-3IT-2.1		5X4/51m
							4x25	2	O 2			3x25	MCB	5950	RST	D2-3IT-2.2		5X4 /50m
								3	O 3			3x25	MCB	6760	RST	D2-3IT-2.3		5X4 /26m
							25	4	O 4			3x25	MCB	6760	RST	D2-3IT-2.4		5X4 /25m
							25	5	O 5			3x25	EMCB	14880	RST	D2-3IT-2.5		5X4 /20m
		SOC.P.(W)					25	6	O 6			3x25	MCB	10640	RST	D2-3IT-2.6		5X4 /27m
							4x25	7	O 7			3x25	MCB	5800	RST	D2-3IT-2.7		5X4 /20m
								8	O 8			20	MCB			AUX.		3X4N2XH
TOTAL					58360 W					0	0			58360	R	S	T	RST
															0	0	0	58360

TABLE					ENTER			LINE				FUSE		POWER	PHASE	INFORMATION		FEEDER N2XH
NAME	POWER			TYPE	FUSE	ELCB		NO		SOCKET	LIGHT	CURRENT	TYPE					
D2-3IT-2.1	7570 W	ILLUM. P(W)	1870	M.D.T	3x 20 A MCB			1	A 1		6	10	MCB	420	R			3x2,5N2XH
								2	A 2		6	10	MCB	630	R			3x2,5N2XH
								3	A 3		5	10	MCB	200	T			3x2,5N2XH
								4	A 4		6	10	MCB	420	R			3x2,5N2XH
								5	A 5		5	10	MCB	200	S			3x2,5N2XH
		SOC.P.(W)	5700					6	P 1	4		16	MCB	1200	T			3x2,5N2XH
								7	P 2	4		16	MCB	1200	R			3x2,5N2XH
								8	P 3	3		16	MCB	900	S			3x2,5N2XH
								9	P 4	4		16	MCB	1200	T			3x2,5N2XH
								10	P 5	4		16	MCB	1200	S			3x2,5N2XH
TOTAL					7570 W					19	28			7570	R	S	T	RST
															2670	2300	2600	0

TABLE					ENTER			LINE				FUSE		POWER	PHASE	INFORMATION		FEEDER N2XH
NAME	POWER			TYPE	FUSE	ELCB		NO		SOCKET	LIGHT	CURRENT	TYPE					
D2-3IT-2.2	5950 W	ILLUM. P(W)	1450	M.D.T	3x 20 A MCB			1	A 1		9	10	MCB	630	R			3x2,5N2XH
								2	A 2		5	10	MCB	200	T			3x2,5N2XH
								3	A 3		6	10	MCB	420	T			3x2,5N2XH
								4	A 4		5	10	MCB	200	R			3x2,5N2XH
		SOC.P.(W)	4500					5	P 1	4		16	MCB	1200	R			3x2,5N2XH
								6	P 2	4		16	MCB	1200	T			3x2,5N2XH
								7	P 3	3		16	MCB	900	S			3x2,5N2XH
								8	P 4	4		16	MCB	1200	S			3x2,5N2XH
TOTAL					5950 W					15	25			5950	R	S	T	RST
															2030	2100	1820	0

TABLE					ENTER			LINE				FUSE		POWER	PHASE	INFORMATION		FEEDER N2XH
NAME	POWER			TYPE	FUSE	ELCB		NO		SOCKET	LIGHT	CURRENT	TYPE					
D2-3IT-2.3\D2-3IT-2.4	6760 W	ILLUM. P(W)	1660	M.D.T	3x 20 A MCB			1	A 1		6	10	MCB	420	R			3x2,5N2XH
								2	A 2		6	10	MCB	420	S			3x2,5N2XH
								3	A 3		5	10	MCB	200	R			3x2,5N2XH
								4	A 4		6	10	MCB	420	R			3x2,5N2XH
								5	A 5		5	10	MCB	200	S			3x2,5N2XH
		SOC.P.(W)	5100					6	P 1	4		16	MCB	1200	T			3x2,5N2XH
								7	P 2	4		16	MCB	1200	R			3x2,5N2XH
								8	P 3	5		16	MCB	1500	S			3x2,5N2XH
								9	P 4	4		16	MCB	1200	T			3x2,5N2XH
TOTAL					6760 W					17	28			6760	R	S	T	RST
															2240	2120	2400	0

TABLE					ENTER			LINE				FUSE		POWER	PHASE	INFORMATION		FEEDER
NAME	POWER			TYPE	FUSE	ELCB		NO		SOCKET	LIGHT	CURRENT	TYPE					N2XH
D2-3IT-2.5	14880 W	LUM. POW. (W)	4580	M.D.T	3x 20 A MCB		4x25 ELCB	1	A 1		16	3x10	MCB	1180	RST			5x2,5N2XH
								2	A 2		10	10	MCB	400	S			3x2,5N2XH
								3	A 3		7	10	MCB	280	R			3x2,5N2XH
								4	A 4		10	10	MCB	400	T			3x2,5N2XH
								5	A 5		6	10	MCB	240	R			3x2,5N2XH
								6	A 6		34	3x10	MCB	1360	RST			5x2,5N2XH
								7	A 7		4	10	MCB	240	R			3x2,5N2XH
								8	A 8		4	10	MCB	240	S			3x2,5N2XH
								9	A 9		6	10	MCB	240	R			3x2,5N2XH
								10	A 10			10	MCB			AUX.		3x2,5N2XH
		SOCKET POWER (W)	10300				4x25 ELCB	11	P 1	4		16	MCB	1200	R			3x2,5N2XH
								12	P 2	3		16	MCB	900	S			3x2,5N2XH
								13	P 3			16	MCB	2000	T	H.D.M		3x2,5N2XH
								14	P 4			16	MCB	2000	S	H.D.M		3x2,5N2XH
								15	P 5	3		16	MCB	900	T			3x2,5N2XH
								16	P 6	4		16	MCB	1200	R			3x2,5N2XH
								17	P 7			16	MCB			AUX.		3x2,5N2XH
								18	F 1	5		16	MCB	500				3x2,5N2XH
								19	F 2	6		16	MCB	600				3x2,5N2XH
								20	F 3	5		16	MCB	500				3x2,5N2XH
								21	F 4	5		16	MCB	500				3x2,5N2XH
TOTAL					14880 W					35	97			14880	R	S	T	RST
															3400	3540	3300	2540

TABLE					ENTER			LINE				FUSE		POWER	PHASE	INFORMATION			FEEDER N2XH
NAME	POWER			TYPE	FUSE	ELCB		NO		SOCKET	LIGHT	CURRENT	TYPE						
D2-3IT-2.6	10640 W	LUM.POWER (W)	1340	M.D.T	3x 20 A MCB	4x 25A ELCB	I	1	A 1		6	10	MCB	420	R				3x2,5N2XH
								2	A 2		6	10	MCB	240	S				3x2,5N2XH
								3	A 3		9	10	MCB	180	T				3x2,5N2XH
								4	A 4		6	10	MCB	220	R				3x2,5N2XH
								5	A 5		7	10	MCB	280	T				3x2,5N2XH
								6	A 6			10	MCB			AUX.			3x2,5N2XH
								7	P 1	5		16	MCB	1500	S				3x2,5N2XH
								8	P 2	3		16	MCB	900	T				3x2,5N2XH
		SOCKET POWER (W)	8400					9	P 3			16	MCB	2000	R	H.D.M			3x2,5N2XH
								10	P 4			16	MCB	2000	T	H.D.M			3x2,5N2XH
							II	11	P 5			16	MCB	2000	S	H.D.M			3x2,5N2XH
								12	P 6			16	MCB			AUX.			3x2,5N2XH
								13	F 1	4		16	MCB	400	R				3x2,5N2XH
								14	F 2	5		16	MCB	500	R				3x2,5N2XH
								15											
TOTAL					10640 W					17	34			10640	R 3540	S 3740	T 3360		RST 0

TABLE					ENTER			LINE				FUSE		POWER	PHASE	INFORMATION		FEEDER N2XH
NAME	POWER			TYPE	FUSE	ELCB		NO		SOCKET	LIGHT	CURRENT	TYPE					
D2-3IT-2.7	5800 W	LUM.POWER (W)	4600	M.D.T	20 A MCB	4x 25A ELCB	I	1	A 1		8	10	MCB	560	S			3X4N2XH
								2	A 2		13	10	MCB	780	S			3X4N2XH
								3	A 3		10	10	MCB	800	T			3X4N2XH
								4	A 4		13	3x10	MCB	780	RST			5X4N2XH
								5	A 5		17	3x10	MCB	1020	RST			5X4N2XH
								6	A 6		6	10	MCB	360	T			3X4N2XH
								7	A 7		5	10	MCB	300	T			3X4N2XH
		SOCKET POWER (W)	900					8	A 8			10	MCB		S	AUX.		3X4N2XH
								9	P 1	3		16	MCB	900	R			3X4N2XH
								10	P 2			16	MCB		R	AUX.		3X4N2XH
							II	11	F 1	3		16	MCB	300	S			3X4N2XH
								12										
								13										
								14										
								15										
TOTAL					5800 W					6	72			5800	R	S	T	RST
															900	1640	1460	1800

TABLE					ENTER			LINE				FUSE						
NAME	POWER			TYPE	FUSE	ELCB		NO		SOCKET	LIGHT	CURRENT	TYPE	POWER	PHASE	INFORMATION		FEEDER N2XH
D3-3IT-1	57800 W	LUMINARY POWER (W)		M.D.T	3x 80 A EMCB	4x 80A ELCB (300 mA)	4X25 ELCB	1	A 1		7	10	MCB	280	T			3x2,5N2XH
								2	A 2		4	10	MCB	240	S			3x2,5N2XH
								3	A 3		7	10	MCB	280	T			3x2,5N2XH
								4	A 4		4	10	MCB	240	T			3x2,5N2XH
								5	A 5		6	10	MCB	240	T			3x2,5N2XH
								6	A 6		4	10	MCB	240	T			3x2,5N2XH
								7	A 7		10	10	MCB	400	S			3x2,5N2XH
								8	A 8		30	3x10	MCB	2400	RST			5x2,5N2XH
								9	A 9		10	10	MCB	400	T			3x2,5N2XH
								10	A 10		5	10	MCB	200	R			3x2,5N2XH
								11	A 11		37	3x10	MCB	1480	RST			5x2,5N2XH
								12	A 12			10	MCB			AUX.		3x2,5N2XH
								13	P 1	2		16	MCB	600	S			3x2,5N2XH
								14	P 2			16	MCB	2000	S			3x2,5N2XH
							4X25 ELCB	15	P 3			16	MCB	2000	R			3x2,5N2XH
								16	P 4	2		16	MCB	600	T			3x2,5N2XH
								17	P 5			16	MCB	2000	T	H.D.M		3x2,5N2XH
								18	P 6			16	MCB	2000	R	H.D.M		3x2,5N2XH
		SOCKET POWER (W)						19	P 7	3		16	MCB	900	S			3x2,5N2XH
								20	P 8	3		16	MCB	900	R			3x2,5N2XH
								21	P 9	4		16	MCB	1200	T			3x2,5N2XH
								22	P 10	4		16	MCB	1200	S			3x2,5N2XH
								23	P 11			16	MCB			AUX.		3x2,5N2XH
								24	F 1	5		16	MCB	500	R			3x2,5N2XH
								25	F 2	6		16	MCB	600	S			3x2,5N2XH
								26	F 3	6		16	MCB	600	T			3x2,5N2XH
								27	F 4	6		16	MCB	600	R			3x2,5N2XH
							4X25	28	O 1			3x25	MCB	5950	RST	D2-3IT-1.1		5X4/30m
								29	O 2			3x25	MCB	5950	RST	D2-3IT-1.2		5X4/31m
								30	O 3			3x25	MCB	5950	RST	D2-3IT-1.3		5X4/9m
								31	O 4			3x25	MCB	5950	RST	D2-3IT-1.4		5X4/10m
								32	O 5			3x25	MCB	5950	RST	D2-3IT-1.5		5X4/30m
								33	O 6			3x25	MCB	5950	RST	D2-3IT-1.6		5X4/31m
TOTAL					57800 W					41	124			57800	R	S	T	RST
															6200	5940	6080	39580

TABLE					ENTER			LINE				FUSE		POWER	PHASE	INFORMATION		FEEDER N2XH
NAME	POWER			TYPE	FUSE	ELCB		NO		SOCKET	LIGHT	CURRENT	TYPE					
	5950 W	ILLUM. P(W)	1450	M.D.T	3x 20 A MCB			1	A 1		9	10	MCB	630	R			3x2,5N2XH
								2	A 2		5	10	MCB	200	T			3x2,5N2XH
								3	A 3		6	10	MCB	420	T			3x2,5N2XH
								4	A 4		5	10	MCB	200	R			3x2,5N2XH
								5	P 1	4		16	MCB	1200	R			3x2,5N2XH
		SOC.P.(W)	4500					6	P 2	4		16	MCB	1200	T			3x2,5N2XH
								7	P 3	3		16	MCB	900	S			3x2,5N2XH
								8	P 4	4		16	MCB	1200	S			3x2,5N2XH
TOTAL					5950 W					15	25			5950	R	S	T	RST
															2030	2100	1820	0

D3-3IT-1.1\D3-3IT-1.2\D3-3IT-1.3\D3-3IT-1.4\D3-3IT-1.5\D3-3IT-1.6

TABLE				ENTRANCE			LINE				FUSE		POWER	PHASE	INFORMATION		FEEDER N2XH
NAME	POWER			FUSE	ELCB		NO		E.S.	LIGHT	CURRENT	TYPE					
A1-7IT-1	45600 W	ILLUM. P (W)		3X63 A MCCB	4x63 ELCB (300mA)	4x25 ELCB	1	A 1		4	10	MCB	320	S			3x2,5N2XH
							2	A 2		27	10	MCB	2160	RST			5x2,5N2XH
							3	A 3		29	10	MCB	2220	RST			5x2,5N2XH
							4	A 4			10	MCB			Auxiliary		3x2,5N2XH
							5	P 1	3		16	MCB	900	T			3x2,5N2XH
							6	P 2			16	MCB			Auxiliary		3x2,5N2XH
							7	P 3			16	MCB					3x2,5N2XH
							8	O 1			25	MCB	2220	R	A1-7IT-1.1		3x4/33m
							9	O 2			25	MCB	2220	S	A1-7IT-1.2		3x4/39m
							10	O 3			25	MCB	1110	T	A1-7IT-1.3		3x4/42m
							11	O 4			25	MCB	1110	R	A1-7IT-1.4		3x4/48m
		ESP (W)				4x25 ELCB	12	O 5			25	MCB	1110	S	A1-7IT-1.5		3x4/45m
							13	O 6			25	MCB	1110	T	A1-7IT-1.6		3x4/48m
							14	O 7			25	MCB	1110	R	A1-7IT-1.7		3x4/51m
							15	O 8			25	MCB	1110	S	A1-7IT-1.8		3x6/54m
							16	O 9			25	MCB	3330	T	A1-7IT-1.9		3x10/60m
							17	O 10			25	MCB	1110	R	A1-7IT-1.10		3x6/61m
							18	O 11			25	MCB	1110	T	A1-7IT-1.11		3x10/67m
						4x25	19	O 12			25	MCB	1110	T	A1-7IT-1.12		3x10/68m
							20	O 13			25	MCB	3260	R	A1-7IT-1.13		3x6/44m
							21	O 14			25	MCB	3860	S	A1-7IT-1.14		3x10/33m
						4x	22	O 15			3x32	MCCB	15120	RST	A1-7IT-1.15		5x10/32m
TOTAL				45600 W					3	60			45600	R	S	T	RST
														8810	8620	8670	19500

TABLE				ENTRANCE			LINE				FUSE		POWER	PHASE	INFORMATION		FEEDER N2XH
NAME	POWER			FUSE	ELCB		NO		SOCKET	LIGHT	CURRENT	TYPE					
A1-7IT-1.1/A1-7IT-1.2	2220 W	ILLUM.P(W)	420	20 A MCB			1	A 1		6	10	MCB	420				3x2,5N2XH
							2	P 1	6		16	MCB	1800				3x2,5N2XH
		S.P.(W)	1800														
TOTAL				2220 W					6	6			2220	R	S	T	RST
														0	0	0	0

TABLE				ENTRANCE			LINE				FUSE		POWER	PHASE	INFORMATION		FEEDER N2XH
NAME	POWER			FUSE	ELCB		NO		SOCKET	LIGHT	CURRENT	TYPE					
	1110 W	ILLUM.P(W)	210	20 A MCB		I	1	A 1		3	10	MCB	210				3x2,5N2XH
							2	P 1	3		16	MCB	900				3x2,5N2XH
		SOCK.P.(W)	900														
TOTAL				1110 W					3	3			1110	R	S	T	RST
														0	0	0	0

A1-7IT-1.3/A1-7IT-1.4/A1-7IT-1.5/A1-7IT-1.6/A1-7IT-1.7/A1-7IT-1.8/A1-7IT-1.10/A1-7IT-1.11/A1-7IT-1.12

TABLE				ENTRANCE			LINE				FUSE		POWER	PHASE	INFORMATION		FEEDER N2XH
NAME	POWER			FUSE	ELCB		NO		SOCKET	LIGHT	CURRENT	TYPE					
A1-7IT-1.9	3330 W	ILLUM.P(W)	630	20 A MCB			1	A 1		9	10	MCB	630				3x2,5N2XH
							2	P 1	3		16	MCB	900				3x2,5N2XH
							3	P 2	3		16	MCB	900				3x2,5N2XH
							4	P 3	3		16	MCB	900				3x2,5N2XH
		SOCK.P.(W)	2700														
TOTAL				3330 W					9	9			3330	R	S	T	RST
														0	0	0	0

TABLE				ENTRANCE			LINE				FUSE		POWER	PHASE	INFORMATION		FEEDER N2XH
NAME	POWER			FUSE	ELCB		NO		SOCKET	LIGHT	CURRENT	TYPE					
A1-7IT-1.13	3260 W	ILLUM.P(W)	560	20 A MCB			1	A 1		8	10	MCB	560				3x2,5N2XH
							2	P 1	5		16	MCB	1500				3x2,5N2XH
							3	P 2	4		16	MCB	1200				3x2,5N2XH
		SOCK.P.(W)	2700														
TOTAL				3260 W					9	8			3260	R	S	T	RST
														0	0	0	0

TABLE				ENTRANCE			LINE				FUSE		POWER	PHASE	INFORMATION		FEEDER N2XH
NAME	POWER			FUSE	ELCB		NO		SOCKET	LIGHT	CURRENT	TYPE					
A1-7IT-1.14	3860 W	ILLUM.P(W)	560	20 A MCB			1	A 1		8	10	MCB	560				3x2,5N2XH
							2	P 1	3		16	MCB	900				3x2,5N2XH
							3	P 2	3		16	MCB	900				3x2,5N2XH
							4	P 3	5		16	MCB	1500				3x2,5N2XH
		SOCK.P.(W)	3300														
TOTAL				3860 W					11	8			3860	R	S	T	RST
														0	0	0	0

TABLE				ENTRANCE			LINE				FUSE		POWER	PHASE	INFORMATION		FEEDER N2XH
NAME	POWER			FUSE	ELCB		NO		SOCKET	LIGHT	CURRENT	TYPE					
A1-7IT-1.15	15120 W	ILLUM. P (W)	6620	3x 25 A MCB	4x 25A ELCB	I	1	A 1		7	10	MCB	280	S			3x2,5N2XH
							2	A 2		7	10	MCB	140	T			3x2,5N2XH
							3	A 3		4	10	MCB	80	R			3x2,5N2XH
							4	A 4		4	10	MCB	240	T			3x2,5N2XH
							5	A 5		13	10	MCB	520	R			3x2,5N2XH
							6	A 6		7	10	MCB	420	R			3x2,5N2XH
							7	A 7		4	10	MCB	360	T			3x2,5N2XH
							8	A 8		2	10	MCB	160	R			3x2,5N2XH
							9	A 9		13	10	MCB	520	S			3x2,5N2XH
							10	A 10		17	3x10	MCB	1020	RST			5x2,5N2XH
							11	A 11		17	3x10	MCB	1020	RST			5x2,5N2XH
							12	A 12		7	10	MCB	420	T			3x2,5N2XH
							13	A 13		10	10	MCB	600	R			3x2,5N2XH
		ESP (W)	8400			II	14	A 14		6	10	MCB	360	S			3x2,5N2XH
							15	A 15		8	10	MCB	480	T			3x2,5N2XH
							16	A 16			10	MCB		R	Auxiliary		3x2,5N2XH
							17	P 1			16	MCB	2000	T	Hand Dry Mch		3x2,5N2XH
							18	P 2			16	MCB	2000	S	Hand Dry Mch		3x2,5N2XH
							19	P 3	2		16	MCB	600	T			3x2,5N2XH
							20	P 4	2		16	MCB	600	R			3x2,5N2XH
							21	P 5	3		16	MCB	900	S			3x2,5N2XH
							22	P 6	2		16	MCB	600	R			3x2,5N2XH
							23	P 7			16	MCB		R	Auxiliary		3x2,5N2XH
							24	F 1	5		16	MCB	500	R			3x2,5N2XH
							25	F 2	6		16	MCB	600	R			3x2,5N2XH
							26	F 3	7		16	MCB	700	S			3x2,5N2XH
TOTAL				15120 W					27	126			15120	R	S	T	RST
														4080	4760	4240	2040

TABLE				ENTRANCE			LINE					FUSE		POWER	PHASE	INFORMATION		FEEDER N2XH
NAME	POWER			FUSE	ELCB		NO		SOCKET	LIGHT	CURRENT	TYPE						
A1-7IT-2	51860 W	ILLUM. P (W)		3x 80 A MCCB	4x80ELCB (300mA)	4x25 ELCB	1	A 1		4	10	MCB	320	S				3x2,5N2XH
							2	A 2		27	10	MCB	2160	RST				5x2,5N2XH
							3	A 3		29	10	MCB	2220	RST				5x2,5N2XH
							4	A 4			10	MCB			Auxiliary			3x2,5N2XH
							5	P 1	3		16	MCB	900	T				3x2,5N2XH
							6	P 2			16	MCB			Auxiliary			3x2,5N2XH
							7	F 1	5		16	MCB	500	R				3x2,5N2XH
							8	O 1			25	MCB	1110	T	A1-7IT-2.1			3x4/33m
							9	O 2			25	MCB	1110	S	A1-7IT-2.2			3x4/36m
							10	O 3			25	MCB	1110	T	A1-7IT-2.3			3x4/39m
							11	O 4			25	MCB	1110	R	A1-7IT-2.4			3x4/42m
						4x25 ELCB	12	O 5			25	MCB	1110	S	A1-7IT-2.5			3x4/45m
		ESP (W)					13	O 6			25	MCB	3330	R	A1-7IT-2.6			3x6/51m
							14	O 7			25	MCB	1110	S	A1-7IT-2.7			3x6/54m
							15	O 8			25	MCB	1110	T	A1-7IT-2.8			3x6/57m
							16	O 9			25	MCB	3330	R	A1-7IT-2.9			3x10/60m
							17	O 10			25	MCB	1110	S	A1-7IT-2.10			3x6/66m
							18	O 11			25	MCB	1110	T	A1-7IT-2.11			3x6/67m
						4x25 ELCB	19	O 12			25	MCB	1110	R	A1-7IT-2.12			3x10/75m
							20	O 13			25	MCB	1110	S	A1-7IT-2.13			3x10/76m
							21	O 14			25	MCB	3330	T	A1-7IT-2.14			3x10/79m
							22	O 15			25	MCB	1110	T	A1-7IT-2.15			3x6/63m
							23	O 16			25	MCB	3860	S	A1-7IT-2.16			3x10/33m
						25	24	O 17			3x32	MCCB	18590	RST	A1-7IT-2.17			5x16/33m
TOTAL				51860 W					8	60			51860	R	S	T		RST
														9380	9730	9780		22970

TABLE				ENTRANCE			LINE				FUSE		POWER	PHASE	INFORMATION		FEEDER N2XH
NAME	POWER			FUSE	ELCB		NO		SOCKET	LIGHT	CURRENT	TYPE					
	1110 W	ILLUM.P(W)	210	20 A MCB			1	A 1		3	10	MCB	210				3x2,5N2XH
							2	P 1	3		16	MCB	900				3x2,5N2XH
		SOCK.P.(W)	900														
TOTAL				1110 W					3	3			1110	R	S	T	RST
														0	0	0	0

A1-7IT-2.1\A1-7IT-2.2/A1-7IT-2.3/A1-7IT-2.4/A1-7IT-2.5/A1-7IT-2.7/A1-7IT-2.8/A1-7IT-2.10
A1-7IT-2.11\A1-7IT-2.12/A1-7IT-2.13/A1-7IT-2.15

TABLE				ENTRANCE			LINE				FUSE		POWER	PHASE	INFORMATION		FEEDER N2XH
NAME	POWER			FUSE	ELCB		NO		SOCKET	LIGHT	CURRENT	TYPE					
	3330 W	ILLUM.P(W)	630	20 A MCB			1	A 1		9	10	MCB	630				3x2,5N2XH
							2	P 1	3		16	MCB	900				3x2,5N2XH
							3	P 2	3		16	MCB	900				3x2,5N2XH
							4	P 3	3		16	MCB	900				3x2,5N2XH
		SOCK.P.(W)	2700														
TOTAL				3330 W					9	9			3330	R	S	T	RST
														0	0	0	0

A1-7IT-2.6/A1-7IT-2.9/A1-7IT-2.14

TABLE				ENTRANCE			LINE				FUSE		POWER	PHASE		INFORMATION		FEEDER N2XH
NAME	POWER			FUSE	ELCB		NO		SOCKET	LIGHT	CURRENT	TYPE						
A1-7IT-2.16	3860 W	ILLUM.P(W)	560	20 A MCB			1	A 1		8	10	MCB	560					3x2,5N2XH
							2	P 1	5		16	MCB	1500					3x2,5N2XH
							3	P 2	3		16	MCB	900					3x2,5N2XH
							4	P 3	3		16	MCB	900					3x2,5N2XH
		SOCK.P.(W)	3300															
TOTAL				3860 W					11	8			3860	R	S	T	RST	
														0	0	0	0	

TABLE				ENTRANCE			LINE				FUSE		POWER	PHASE	INFORMATION		FEEDER N2XH
NAME	POWER			FUSE	ELCB		NO		SOCKET	LIGHT	CURRENT	TYPE					
A1-7IT-2.17	18590 W	ILLUM. P (W)	8890	3x 25 A MCB		4x25 ELCB	1	A 1		7	10	MCB	280	T			3x2,5N2XH
							2	A 2		7	10	MCB	140	R			3x2,5N2XH
							3	A 3		4	10	MCB	80	T			3x2,5N2XH
							4	A 4		4	10	MCB	240	T			3x2,5N2XH
							5	A 5		13	10	MCB	520	S			3x2,5N2XH
							6	A 6		7	10	MCB	420	R			3x2,5N2XH
							7	A 7		7	10	MCB	420	T			3x2,5N2XH
							8	A 8		2	10	MCB	160	R			3x2,5N2XH
							9	A 9		13	10	MCB	520	S			3x2,5N2XH
							10	A 10		17	3x10	MCB	1020	RST			5x2,5N2XH
							11	A 11		17	3x10	MCB	1020	RST			5x2,5N2XH
							12	A 12		13	10	MCB	780	T			3x2,5N2XH
							13	A 13		7	10	MCB	320	S			3x2,5N2XH
							14	A 14		10	10	MCB	600	S			3x2,5N2XH
							15	A 15		6	10	MCB	360	T			3x2,5N2XH
							16	A 16		8	10	MCB	480	R			3x2,5N2XH
							17	A 17		3	10	MCB	90	S			3x2,5N2XH
		ESP (W)	6700			4x25 ELCB	18	A 18		32	3x10	MCB	1280	RST			5x2,5N2XH
							19	A 19		4	10	MCB	160	S			3x2,5N2XH
							20	A 20			10	MCB			Auxiliary		3x2,5N2XH
							21	P 1			16	MCB	2000	R	Hand Dry Mch		3x2,5N2XH
							22	P 2			16	MCB	2000	S	Hand Dry Mch		3x2,5N2XH
							23	P 3	2		16	MCB	600	T			3x2,5N2XH
							24	P 4	2		16	MCB	600	R			3x2,5N2XH
							25	P 5	3		16	MCB	900	T			3x2,5N2XH
							26	P 6	2		16	MCB	600	T			3x2,5N2XH
							27	P 7			16	MCB			Auxiliary		3x2,5N2XH
							28	F 1	5		16	MCB	500	R			3x2,5N2XH
							29	F 2	5		16	MCB	500	S			3x2,5N2XH
							30	F 3	5		16	MCB	500	T			3x2,5N2XH
							31	F 4	4		16	MCB	400	R			3x2,5N2XH
							32	F 5	4		16	MCB	400	T			3x2,5N2XH
							33	F 6	3		16	MCB	300	S			3x2,5N2XH
							34	F 7	4		16	MCB	400	R			3x2,5N2XH
TOTAL				18590 W					39	181			18590	R	S	T	RST
														0	0	0	0

TABLE			ENTRANCE			LINE				FUSE		POWER	PHASE	INFORMATION	FEEDER N2XH
NAME	POWER		FUSE	ELCB		NO		SOCKET	LIGHT	CURRENT	TYPE				
:2-7IT-1	W	ILLUM. P (W)	MCCB	ELCB (300mA)	4x25 ELCB	1	A 1		6	10	MCB	240	R		3x2,5N2XH
						2	A 2		4	10	MCB	240	S		3x2,5N2XH
						3	A 3		7	10	MCB	280	T		3x2,5N2XH
						4	A 4		4	10	MCB	240	R		3x2,5N2XH
						5	A 5		6	10	MCB	360	S		3x2,5N2XH
						6	A 6		4	10	MCB	240	T		3x2,5N2XH
						7	A 7		38	3x10	MCB	1520	RST		5x2,5N2XH
						8	A 8		12	10	MCB	480	R		3x2,5N2XH
						9	A 9		6	10	MCB	240	S		3x2,5N2XH
						10	A 10		10	10	MCB	400	T		3x2,5N2XH
						11	A 11		6	10	MCB	240	R		3x2,5N2XH
						12	A 12		12	10	MCB	480	S		3x2,5N2XH
						13	A 13		5	10	MCB	150	T		3x2,5N2XH
						14	A 14			10	MCB			Auxiliary	3x2,5N2XH
						15	P 1	2		16	MCB	600	S		3x2,5N2XH
						16	P 2			16	MCB	2000	T	Hand Dry Mch	3x2,5N2XH
						17	P 3			16	MCB	2000	S	Hand Dry Mch	3x2,5N2XH
						18	P 4	2		16	MCB	600	R		3x2,5N2XH
						19	P 5			16	MCB	2000	T	Hand Dry Mch	3x2,5N2XH
						20	P 6			16	MCB	2000	R	Hand Dry Mch	3x2,5N2XH
					4x25 ELCB	21	P 7	3		16	MCB	900	S		3x2,5N2XH
						22	P 8	3		16	MCB	900	S		3x2,5N2XH
						23	P 9			16	MCB				3x2,5N2XH
						24	F 1	6		16	MCB	600	R		3x2,5N2XH
						25	F 2	6		16	MCB	600	T		3x2,5N2XH
						26	F 3	6		16	MCB	600	T		3x2,5N2XH
						27	F 4	5		16	MCB	500	R		3x2,5N2XH
						28	F 5	6		16	MCB	600	S		3x2,5N2XH
					B	29	O 1			25	MCB	1110	R	B2-7IT-1.1	3x4/29m
						30	O 2			25	MCB	1110	S	B2-7IT-1.2	3x4/26m

B	50510	ESP (W)		3x 80 A	4x 80 1	4x25 ELC	31	O 3			25	MCB	1110	T	B2-7IT-1.3	3x4/23m
							32	O 4			25	MCB	1110	R	B2-7IT-1.4	3x4/20m
							33	O 5			25	MCB	1110	S	B2-7IT-1.5	3x4/17m
							34	O 6			25	MCB	1110	T	B2-7IT-1.6	3x4/14m
							35	O 7			25	MCB	1110	R	B2-7IT-1.7	3x4/11m
						4x25 ELCB	36	O 8			25	MCB	1110	S	B2-7IT-1.8	3x4/8m
							37	O 9			25	MCB	1110	T	B2-7IT-1.9	3x4/11m
							38	O 10			25	MCB	1110	R	B2-7IT-1.10	3x4/14m
							39	O 11			25	MCB	1110	S	B2-7IT-1.11	3x4/17m
							40	O 12			25	MCB	1110	T	B2-7IT-1.12	3x4/20m
							41	O 13			25	MCB	1110	R	B2-7IT-1.13	3x4/23m
							42	O 14			25	MCB	1110	S	B2-7IT-1.14	3x4/26m
						4x25 ELCB	43	O 15			25	MCB	1110	S	B2-7IT-1.15	3x4/29m
							44	O 16			25	MCB	1110	R	B2-7IT-1.16	3x4/32m
							45	O 17			25	MCB	1110	S	B2-7IT-1.17	3x4/35m
							46	O 18			25	MCB	1110	T	B2-7IT-1.18	3x4/38m
							47	O 19			25	MCB	2430	R	B2-7IT-1.19	3x4/35m
							48	O 20			25	MCB	1110	S	B2-7IT-1.20	3x4/21m
							49	O 21			25	MCB	1110	T	B2-7IT-1.21	3x4/18m
						4x25 ELCB	50	O 22			25	MCB	1110	R	B2-7IT-1.22	3x4/15m
							51	O 23			25	MCB	1110	S	B2-7IT-1.23	3x4/5m
							52	O 24			25	MCB	1110	T	B2-7IT-1.24	3x4/8m
							53	O 25			25	MCB	1110	R	B2-7IT-1.25	3x4/11m
							54	O 26			25	MCB	2430	T	B2-7IT-1.26	3x4/24m
TOTAL				50510 W					39	120			50510	R	S	T	RST
														16210	16310	16470	1520

TABLE				ENTRANCE			LINE				FUSE		POWER	PHASE	INFORMATION			FEEDER N2XH
NAME	POWER			FUSE	ELCB		NO		SOCKET	LIGHT	CURRENT	TYPE						
	1110 W	ILLUM.P(W)	210	20 A MCB			1	A 1		3	10	MCB	210					3x2,5N2XH
		SOCK.P.(W)	900				2	P 1	3		16	MCB	900					3x2,5N2XH
														R	S	T	RST	
TOTAL				1110 W					3	3			1110	0	0	0	0	

B2-7IT-1.1\B2-7IT-1.2/B2-7IT-1.3/B2-7IT-1.4/B2-7IT-1.5/B2-7IT-1.6/B2-7IT-1.7/B2-7IT-1.8/B2-7IT-1.9/B2-7IT-1.10
B2-7IT-1.11\B2-7IT-1.12/B2-7IT-1.13/B2-7IT-1.14/B2-7IT-1.15/B2-7IT-1.16/B2-7IT-1.17/B2-7IT-1.18/B2-7IT-1.20

TABLE				ENTRANCE			LINE				FUSE		POWER	PHASE	INFORMATION			FEEDER N2XH
NAME	POWER			FUSE	ELCB		NO		SOCKET	LIGHT	CURRENT	TYPE						
	2430 W	ILLUM.P(W)	630	20 A MCB			1	A 1		9	10	MCB	630	R				3x2,5N2XH
		S.P.(W)	1800				2	P 1	6		16	MCB	1800	T				3x2,5N2XH
														R	S	T	RST	
TOTAL				2430 W					6	9			2430	630	0	1800	0	

B2-7IT-1.19\B2-7IT-1.26

TABLE				ENTRANCE			LINE				FUSE		POWER	PHASE	INFORMATION			FEEDER N2XH
NAME	POWER			FUSE	ELCB		NO		SOCKET	LIGHT	CURRENT	TYPE						
B2-7IT-2	47750 W	ILLUM. P (W)		3x 80 A MCB	4x 80A ELCB (300mA)	4x25 ELCB	1	O 1			25	MCB	1110	R	B2-7IT-2.1			3x4/33m
							2	O 2			25	MCB	1110	S	B2-7IT-2.2			3x4/36m
							3	O 3			25	MCB	1110	T	B2-7IT-2.3			3x4/39m
							4	O 4			25	MCB	1110	R	B2-7IT-2.4			3x4/42m
							5	O 5			25	MCB	1110	S	B2-7IT-2.5			3x4/45m
						4x25 ELCB	6	O 6			25	MCB	1110	T	B2-7IT-2.6			3x4/48m
							7	O 7			25	MCB	1110	R	B2-7IT-2.7			3x4/51m
							8	O 8			25	MCB	1110	S	B2-7IT-2.8			3x4/54m
							9	O 9			25	MCB	1110	T	B2-7IT-2.9			3x4/57m
							10	O 10			25	MCB	1110	R	B2-7IT-2.10			3x6/60m
						4x25 ELCB	11	O 11			25	MCB	1110	S	B2-7IT-2.11			3x6/63m
							12	O 12			25	MCB	1110	T	B2-7IT-2.12			3x6/66m
		ESP (W)					13	O 13			25	MCB	1110	R	B2-7IT-2.13			3x4/36m
							14	O 14			25	MCB	1110	S	B2-7IT-2.14			3x6/50m
							15	O 15			25	MCB	1110	T	B2-7IT-2.15			3x6/53m
							16	O 16			25	MCB	1110	R	B2-7IT-2.16			3x6/56m
							17	O 17			25	MCB	1110	S	B2-7IT-2.17			3x6/66m
						25	18	O 18			3x25	MCB	12440	RST	B2-7IT-2.18			5x4/20m
						25	19	O 19			3x33	MCB	10640	RST	B2-7IT-2.19			5x4/27m
						25	20	O 20			3x34	MCB	5800	RST	B2-7IT-2.20			5x4/20m
							21	O 21			3x35	MCB			Auxiliary			
TOTAL				47750 W					0	0			47750	R	S	T		RST
														6660	6660	5550		28880

TABLE				ENTRANCE			LINE				FUSE		POWER	PHASE		INFORMATION		FEEDER N2XH
NAME	POWER			FUSE	ELCB		NO		SOCKET	LIGHT	CURRENT	TYPE						
	1110 W	ILLUM.P(W)	210	20 A MCB			1	A 1		3	10	MCB	210					3x2,5N2XH
							2	P 1	3		16	MCB	900					3x2,5N2XH
		SOCK.P.(W)	900															
TOTAL				1110 W					3	3			1110	R	S	T		RST
														0	0	0		0

B2-7IT-2.1\B2-7IT-2.2/B2-7IT-2.3/B2-7IT-2.4/B2-7IT-2.5/B2-7IT-2.6/B2-7IT-2.7/B2-7IT-2.8/B2-7IT-2.9/B2-7IT-2.10
B2-7IT-2.11\B2-7IT-2.12/B2-7IT-2.13/B2-7IT-2.14/B2-7IT-2.15/B2-7IT-2.16/B2-7IT-2.17

TABLE				ENTRANCE			LINE				FUSE		POWER	PHASE	INFORMATION		FEEDER N2XH
NAME	POWER			FUSE	ELCB		NO		SOCKET	LIGHT	CURRENT	TYPE					
B2-7IT-2.18	12440 W	ILLUM.P (W)	3240	3x 20 A MCB	4x 25 A ELCB	I	1	A 1		4	10	MCB	160	S			3x2,5N2XH
							2	A 2		28	3x10	MCB	1120	RST			5x2,5N2XH
							3	A 3		7	10	MCB	280	T			3x2,5N2XH
							4	A 4		4	10	MCB	160	S			3x2,5N2XH
							5	A 5		6	10	MCB	240	T			3x2,5N2XH
							6	A 6		10	10	MCB	520	R			3x2,5N2XH
							7	A 7		16	10	MCB	520	R			3x2,5N2XH
							8	A 8		10	10	MCB	240	S			3x2,5N2XH
							9	A 9			10	MCB			Auxiliary		3x2,5N2XH
							10	P 1	3		16	MCB	1200	T			3x2,5N2XH
		ESP (W)	7300			II	11	P 2	2		16	MCB	900	R			3x2,5N2XH
							12	P 3			16	MCB	2000	R	Hand Dry Mch		3x2,5N2XH
							13	P 4			16	MCB	2000	S	Hand Dry Mch		3x2,5N2XH
							14	P 5	4		16	MCB	1200	T			3x2,5N2XH
							15	P 6			16	MCB			Auxiliary		3x2,5N2XH
							16	F 1	7		16	MCB	700	S			3x2,5N2XH
							17	F 2	6		16	MCB	600	T			3x2,5N2XH
								F 3	6		16	MCB	600	S			3x2,5N2XH
														R	S	T	RST
TOTAL				12440 W					28	85			12440	3940	3860	3520	1120

TABLE				ENTRANCE			LINE				FUSE		POWER	PHASE	INFORMATION		FEEDER N2XH
NAME	POWER			FUSE	ELCB		NO		SOCKET	LIGHT	CURRENT	TYPE					
B2-7IT-2.19	10640 W	ILLUM.P (W)	1340	3x 20 A MCB	4x 25A ELCB	I	1	A 1		6	10	MCB	420	R			3x2,5N2XH
							2	A 2		6	10	MCB	240	S			3x2,5N2XH
							3	A 3		9	10	MCB	180	T			3x2,5N2XH
							4	A 4		6	10	MCB	220	R			3x2,5N2XH
							5	A 5		7	10	MCB	280	T			3x2,5N2XH
							6	A 6			10	MCB			Auxiliary		3x2,5N2XH
							7	P 1	5		16	MCB	1500	S			3x2,5N2XH
							8	P 2	3		16	MCB	900	T			3x2,5N2XH
		ESP (W)	8400				9	P 3			16	MCB	2000	R	Hand Dry Mch		3x2,5N2XH
							10	P 4			16	MCB	2000	T	Hand Dry Mch		3x2,5N2XH
						II	11	P 5			16	MCB	2000	S	Hand Dry Mch		3x2,5N2XH
							12	P 6			16	MCB			Auxiliary		3x2,5N2XH
							13	F 1	4		16	MCB	400	R			3x2,5N2XH
							14	F 2	5		16	MCB	500	R			3x2,5N2XH
							15										
TOTAL				10640 W					17	34			10640	R	S	T	RST
														3540	3740	3360	0

TABLE				ENTRANCE			LINE				FUSE		POWER	PHASE	INFORMATION		FEEDER N2XH
NAME	POWER			FUSE	ELCB		NO		SOCKET	LIGHT	CURRENT	TYPE					
B2-7IT-2.20	5800 W	ILLUM.P (W)	4600	3x 20 A MCB	4x 25A ELCB	I	1	A 1		8	10	MCB	560	S			3x2,5N2XH
							2	A 2		13	10	MCB	780	S			3x2,5N2XH
							3	A 3		10	10	MCB	800	T			3x2,5N2XH
							4	A 4		13	10	MCB	780	R			3x2,5N2XH
							5	A 5		17	3x10	MCB	1020	RST			5x2,5N2XH
							6	A 6		6	10	MCB	360	T			3x2,5N2XH
							7	A 7		5	10	MCB	300	T			3x2,5N2XH
		ESP (W)	900				8	A 8			10	MCB		S	Auxiliary		3x2,5N2XH
							9	P 1	3		16	MCB	900	R			3x2,5N2XH
							10	P 2			16	MCB		R	Auxiliary		3x2,5N2XH
						II	11	F 1	3		16	MCB	300	S			3x2,5N2XH
							12										
							13										
							14										
							15										
TOTAL				5800 W					6	72			5800	R	S	T	RST
														1680	1640	1460	1020

TABLE				ENTRANCE			LINE				FUSE		POWER	PHASE	INFORMATION	FEEDER N2XH
NAME	POWER			FUSE	ELCB		NO		SOCKET	LIGHT	CURRENT	TYPE				
							1	A 1		6	10	MCB	240	R		3x2,5N2XH
							2	A 2		4	10	MCB	240	S		3x2,5N2XH
							3	A 3		7	10	MCB	280	T		3x2,5N2XH
							4	A 4		4	10	MCB	240	R		3x2,5N2XH
							5	A 5		6	10	MCB	360	S		3x2,5N2XH
							6	A 6		4	10	MCB	240	T		3x2,5N2XH
							7	A 7		38	3x10	MCB	1520	RST		5x2,5N2XH
							8	A 8		12	10	MCB	480	R		3x2,5N2XH
							9	A 9		6	10	MCB	240	S		3x2,5N2XH
							10	A 10		10	10	MCB	400	T		3x2,5N2XH
							11	A 11		6	10	MCB	240	R		3x2,5N2XH
							12	A 12		12	10	MCB	480	S		3x2,5N2XH
						4x25 ELCB	13	A 13			10	MCB			Auxiliary	3x2,5N2XH
							14	A 14			10	MCB				3x2,5N2XH
							15	P 1	2		16	MCB	600	S		3x2,5N2XH
							16	P 2			16	MCB	2000	T	Hand Dry Mch	3x2,5N2XH
							17	P 3			16	MCB	2000	S	Hand Dry Mch	3x2,5N2XH
							18	P 4	2		16	MCB	600	R		3x2,5N2XH
							19	P 5			16	MCB	2000	T	Hand Dry Mch	3x2,5N2XH
							20	P 6			16	MCB	2000	R	Hand Dry Mch	3x2,5N2XH
						4x25 ELCB	21	P 7	3		16	MCB	900	S		3x2,5N2XH
							22	P 8	3		16	MCB	900	S		3x2,5N2XH
							23	P 9			16	MCB			Auxiliary	3x2,5N2XH
							24	F 1	6		16	MCB	600	R		3x2,5N2XH
							25	F 2	6		16	MCB	600	T		3x2,5N2XH
							26	F 3	6		16	MCB	600	T		3x2,5N2XH
							27	F 4	5		16	MCB	500	R		3x2,5N2XH
							28	F 5	6		16	MCB	600	S		3x2,5N2XH
							29	O 1			25	MCB	1110	R	B3-7IT-1.1	3x4/29m
							30	O 2			25	MCB	1110	S	B3-7IT-1.2	3x4/26m
'IT-1	W	ILLUM. P (W)		MCCB	.CB (300 mA)											

B3-7	53690	ESP (W)		3x 80 A	4x 80A EL	4X25 ELCB	31	O 3			25	MCB	1110	T	B3-7IT-1.3			3x4/23m
							32	O 4			25	MCB	1110	R	B3-7IT-1.4			3x4/20m
							33	O 5			25	MCB	1110	S	B3-7IT-1.5			3x4/17m
							34	O 6			25	MCB	1110	T	B3-7IT-1.6			3x4/14m
							35	O 7			25	MCB	1110	R	B3-7IT-1.7			3x4/11m
							36	O 8			25	MCB	1110	S	B3-7IT-1.8			3x4/8m
						4X25 ELCB	37	O 9			25	MCB	1110	T	B3-7IT-1.9			3x4/11m
							38	O 10			25	MCB	1110	R	B3-7IT-1.10			3x4/14m
							39	O 11			25	MCB	1110	S	B3-7IT-1.11			3x4/17m
							40	O 12			25	MCB	1110	T	B3-7IT-1.12			3x4/20m
							41	O 13			25	MCB	1110	R	B3-7IT-1.13			3x4/23m
							42	O 14			25	MCB	1110	S	B3-7IT-1.14			3x4/26m
							43	O 15			25	MCB	1110	S	B3-7IT-1.15			3x4/29m
							44	O 16			25	MCB	1110	R	B3-7IT-1.16			3x4/32m
						4x25 ELCB	45	O 17			25	MCB	1110	S	B3-7IT-1.17			3x4/35m
							46	O 18			25	MCB	1110	T	B3-7IT-1.18			3x4/38m
							47	O 19			25	MCB	1110	R	B3-7IT-1.19			3x4/41m
							48	O 20			25	MCB	1110	S	B3-7IT-1.20			3x4/44m
							49	O 21			25	MCB	1110	T	B3-7IT-1.21			3x4/41m
							50	O 22			25	MCB	2430	R	B3-7IT-1.22			3x4/38m
							51	O 23			25	MCB	1110	S	B3-7IT-1.23			3x4/35m
							52	O 24			25	MCB	1110	T	B3-7IT-1.24			3x4/8m
						4x25 ELCB	53	O 25			25	MCB	1110	R	B3-7IT-1.25			3x4/11m
							54	O 26			25	MCB	1110	T	B3-7IT-1.26			3x4/15m
							55	O 27			25	MCB	1110	T	B3-7IT-1.27			3x4/11m
							56	O 28			25	MCB	1110	T	B3-7IT-1.28			3x4/15m
							57	O 29			25	MCB	2430	T	B3-7IT-1.29			3x4/24m
TOTAL				53690 W					39	115			53690	R	S	T	RST	
														16210	16310	19650	1520	

TABLE				ENTRANCE			LINE				FUSE		POWER	PHASE	INFORMATION		FEEDER N2XH
NAME	POWER			FUSE	ELCB		NO		SOCKET	LIGHT	CURRENT	TYPE					
	1110 W	ILLUM.P(W)	210	20 A MCB			1	A 1		3	10	MCB	210				3x2,5N2XH
							2	P 1	3		16	MCB	900				3x2,5N2XH
		SOCK.P.(W)	900														
TOTAL				1110 W					3	3			1110	R	S	T	RST
														0	0	0	0

B3-7IT-1.1\B3-7IT-1.2/B3-7IT-1.3/B3-7IT-1.4/B3-7IT-1.5/B3-7IT-1.6/B3-7IT-1.7/B3-7IT-1.8/B3-7IT-1.9/B3-7IT-1.10
B3-7IT-1.11\B3-7IT-1.12/B3-7IT-1.13/B3-7IT-1.14/B3-7IT-1.15/B3-7IT-1.16/B3-7IT-1.17/B3-7IT-1.18/B3-7IT-1.19
B3-7IT-1.20\B3-7IT-1.21/B3-7IT-1.23/B3-7IT-1.24/B3-7IT-1.25/B3-7IT-1.26/B3-7IT-1.27/B3-7IT-1.28

TABLE				ENTRANCE			LINE				FUSE		POWER	PHASE	INFORMATION			FEEDER N2XH
NAME	POWER			FUSE	ELCB		NO		SOCKET	LIGHT	CURRENT	TYPE						
	2430 W	ILLUM.P(W)	630	20 A MCB			1	A 1		9	10	MCB	630	R				3x2,5N2XH
							2	P 1	6		16	MCB	1800	T				3x2,5N2XH
		SOCK.P.(W)	1800															
TOTAL				2430 W					6	9			2430	R	S	T		RST
														630	0	1800		0

B3-7IT-1.22\B3-7IT-1.29

TABLE				ENTRANCE			LINE				FUSE						
NAME	POWER			FUSE	ELCB		NO		SOCKET	LIGHT	CURRENT	TYPE	POWER	PHASE	INFORMATION		FEEDER N2XH
C1-7IT-1	50380 W	ILLUM. P (W)		3x 80 A MCCB	4x 80A ELCB (300mA)	4x25 ELCB	1	A 1		6	10	MCB	120	S			3x2,5N2XH
							2	A 2		8	10	MCB	320	T			3x2,5N2XH
							3	A 3		5	10	MCB	200	R			3x2,5N2XH
							4	A 4		21	3x10	MCB	840	RST			5x2,5N2XH
							5	A 5		6	10	MCB	480	S			3x2,5N2XH
							6	A 6		6	10	MCB	240	R			3x2,5N2XH
							7	A 7		6	10	MCB	480	T			3x2,5N2XH
							8	A 8		7	10	MCB	520	T			3x2,5N2XH
							9	A 9		12	3x10	MCB	960	RST			5x2,5N2XH
							10	A 10			10	MCB			Auxiliary		3x2,5N2XH
						4x25 ELCB	11	P 1			16	MCB	2000	T	Hand Dry Mch		3x2,5N2XH
							12	P 2	3		16	MCB	900	S			3x2,5N2XH
							13	P 3			16	MCB	2000	S	Hand Dry Mch		3x2,5N2XH
							14	P 4	4		16	MCB	1200	R			3x2,5N2XH
							15	P 5	4		16	MCB	1200	S			3x2,5N2XH
		ESP (W)					16	P 6			16	MCB			Auxiliary		3x2,5N2XH
							17	F 1	6		16	MCB	600	S			3x2,5N2XH
							18	F 2	6		16	MCB	600	R			3x2,5N2XH
							19	F 3	5		16	MCB	500	S			3x2,5N2XH
							20	F 4	7		16	MCB	700	T			3x2,5N2XH
						4x25	21	O 1			25	MCB	3930	T	C1-7IT-1.1		3x4/31m
							22	O 2			25	MCB	3930	S	C1-7IT-1.2		3x4/30m
							23	O 3			3x25	MCB	7100	RST	C1-7IT-1.3		5x4/8m
						4X25	24	O 4			25	MCB	3930	T	C1-7IT-1.4		3x4/18m
							25	O 5			25	MCB	3000	R	C1-7IT-1.5		3x4/15m
							26	O 6			25	MCB	2220	S	C1-7IT-1.6		3x4/8m
							27	O 7			25	MCB	2220	R	C1-7IT-1.7		3x4/12m
						4x25	28	O 8			25	MCB	3140	R	C1-7IT-1.8		3x4/40m
							29	O 9			3x25	MCB.	5940	RST	C1-7IT-1.9		5x4/46m
							30	O 10			25	MCB	1110	R	C1-7IT-1.10		3x4/46m
TOTAL				50380 W					35	77			50380	R	S	T	RST
														11710	11950	11880	14840

TABLE				ENTRANCE			LINE				FUSE		POWER	PHASE	INFORMATION		FEEDER N2XH
NAME	POWER			FUSE	ELCB		NO		SOCKET	LIGHT	CURRENT	TYPE					
C1-7IT-1.1/C1/7IT-1.2	3930 W	ILLUM.P(W)	630	20 A MCB			1	A 1		9	10	MCB	630				3x2,5N2XH
							2	P 1	4		16	MCB	1200				3x2,5N2XH
							3	P 2	4		16	MCB	1200				3x2,5N2XH
							4	P 3	3		16	MCB	900				3x2,5N2XH
		SOCK.P.(W)	3300														
TOTAL				3930 W					11	9			3930	R	S	T	RST
														0	0	0	0

TABLE				ENTRANCE			LINE				FUSE		POWER	PHASE	INFORMATION		FEEDER N2XH
NAME	POWER			FUSE	ELCB		NO		SOCKET	LIGHT	CURRENT	TYPE					
	7100 W	ILLUM.P(W)	1400	3x 20 A MCB			1	A 1		6	10	MCB	420	R			3x2,5N2XH
							2	A 2		6	10	MCB	560	R			3x2,5N2XH
							3	A 3		6	10	MCB	420	S			3x2,5N2XH
							4	P 1	4		16	MCB	1200	R			3x2,5N2XH
							5	P 2	3		16	MCB	900	T			3x2,5N2XH
		SOCK.P.(W)	5700				6	P 3	4		16	MCB	1200	S			3x2,5N2XH
							7	P 4	4		16	MCB	1200	T			3x2,5N2XH
							8	P 5	3		16	MCB	600	S			3x2,5N2XH
							9	P 6	3		16	MCB	600	S			3x2,5N2XH
TOTAL				7100 W					21	18			7100	R	S	T	RST
														2180	2820	2100	0

TABLE				ENTRANCE			LINE				FUSE		POWER	PHASE	INFORMATION		FEEDER N2XH
NAME	POWER			FUSE	ELCB		NO		SOCKET	LIGHT	CURRENT	TYPE					
	3930 W	ILLUM.P(W)	630	20 A MCB			1	A 1		9	10	MCB	630				3x2,5N2XH
							2	P 1	4		16	MCB	1200				3x2,5N2XH
							3	P 2	4		16	MCB	1200				3x2,5N2XH
							4	P 3	3		16	MCB	900				3x2,5N2XH
		SOCK.P.(W)	3300														
TOTAL				3930 W					11	9			3930	R	S	T	RST
														0	0	0	0

TABLE				ENTRANCE			LINE				FUSE		POWER	PHASE	INFORMATION		FEEDER N2XH
NAME	POWER			FUSE	ELCB		NO		SOCKET	LIGHT	CURRENT	TYPE					
	3000 W	ILLUM.P(W)	1500	20 A MCB			1	A 1		9	10	MCB	360				3x2,5N2XH
							2	A 2		6	10	MCB	420				3x2,5N2XH
							3	A 3		6	10	MCB	240				3x2,5N2XH
							4	A 4		6	10	MCB	480				3x2,5N2XH
							5	P 1	5		16	MCB	1500				3x2,5N2XH
		SOCK.P.(W)	1500														
TOTAL				3000 W					5	27			3000	R	S	T	RST
														0	0	0	0

C1-7IT-1.5

TABLE				ENTRANCE			LINE				FUSE		POWER	PHASE	INFORMATION		FEEDER N2XH
NAME	POWER			FUSE	ELCB		NO		SOCKET	LIGHT	CURRENT	TYPE					
	2220 W	ILLUM.P(W)	1020	20 A MCB			1	A 1		9	10	MCB	360				3x2,5N2XH
							2	A 2		6	10	MCB	420				3x2,5N2XH
							3	A 3		6	10	MCB	240				3x2,5N2XH
							4	P 1	4		16	MCB	1200				3x2,5N2XH
		SOCK.P.(W)	1200														
TOTAL				2220 W					4	21			2220	R	S	T	RST
														0	0	0	0

C1-7IT-1.6/C1/7IT-1.7

TABLE				ENTRANCE			LINE				FUSE		POWER	PHASE	INFORMATION		FEEDER N2XH
NAME	POWER			FUSE	ELCB		NO		SOCKET	LIGHT	CURRENT	TYPE					
	3140 W	ILLUM.P(W)	1340	# A MCB			1	A 1		9	10	MCB	360				3x2,5N2XH
							2	A 2		6	10	MCB	420				3x2,5N2XH
							3	A 3		6	10	MCB	240				3x2,5N2XH
							4	A 4		4	10	MCB	320				3x2,5N2XH
							5	P 1	6		16	MCB	1800				3x2,5N2XH
		SOCK.P.(W)	1800														
TOTAL				3140 W					6	25			3140	R	S	T	RST
														0	0	0	0

0

TABLE				ENTRANCE			LINE				FUSE		POWER	PHASE	INFORMATION		FEEDER N2XH
NAME	POWER			FUSE	ELCB		NO		SOCKET	LIGHT	CURRENT	TYPE					
C1-7IT-1.9	5940 W	ILLUM.P(W)	440	3x 20 A MCB			1	A 1		7	10	MCB	280	R			3x2,5N2XH
							2	A 2		4	10	MCB	160	S			3x2,5N2XH
							3	A 3			10	MCB			Auxiliary		3x2,5N2XH
							4	A 4			10	MCB			Auxiliary		3x2,5N2XH
		SOCK.P.(W)	5500				5	P 1	5		16	MCB	1500	R			3x2,5N2XH
							6	P 2			16	MCB	2000	T	Hand Dry Mch		3x2,5N2XH
							7	P 3			16	MCB	2000	S	Hand Dry Mch		3x2,5N2XH
TOTAL				5940 W					5	11			5940	R	S	T	RST
														1780	2160	2000	0

TABLE				ENTRANCE			LINE				FUSE		POWER	PHASE	INFORMATION		FEEDER N2XH
NAME	POWER			FUSE	ELCB		NO		SOCKET	LIGHT	CURRENT	TYPE					
	1110 W	ILLUM.P(W)	210	20 A MCB			1	A 1		3	10	MCB	210	R			3x2,5N2XH
							2	P 1	3		16	MCB	900	T			3x2,5N2XH
		SOCK.P.(W)	900														
TOTAL				1110 W					3	3			1110	R	S	T	RST
														210	0	900	0

C1-7IT-1.10

TABLE		ENTRANCE			LINE				FUSE		POWER	PHASE	INFORMATION		FEEDER N2XH
NAME	POWER	FUSE	ELCB		NO		SOCKET	LIGHT	CURRENT	TYPE					
C1-7IT-2	34970 W	3x 50 A MCCB	4x 50A ELCB (300mA)	4X25 ELCB	1	A 1		6	10	MCB	240	R			3x2,5N2XH
					2	A 2		34	3x10	MCB	1360	RST			5x2,5N2XH
					3	A 3		6	10	MCB	240	T			3x2,5N2XH
					4	A 4		16	3x10	MCB	1280	RST			5x2,5N2XH
					5	A 5		7	10	MCB	520	R			3x2,5N2XH
					6	A 6		6	10	MCB	480	S			3x2,5N2XH
					7	A 7		8	10	MCB	320	R			3x2,5N2XH
					8	A 8			10	MCB			Auxiliary		3x2,5N2XH
					9	P 1	4		16	MCB	1200	R			3x2,5N2XH
					10	P 2	4		16	MCB	1200	R			3x2,5N2XH
					11	P 3			16	MCB	2000	T	Hand Dry Mch		3x2,5N2XH
					12	P 4	2		16	MCB	600	R			3x2,5N2XH
					13	P 5			16	MCB	2000	T	Hand Dry Mch		3x2,5N2XH
					14	P 6			16	MCB			Auxiliary		3x2,5N2XH
					15	F 1	4		16	MCB	400	R			3x2,5N2XH
					16	F 2	6		16	MCB	600	S			3x2,5N2XH
					17	F 3	3		16	MCB	300	T			3x2,5N2XH
				4X25	18	O 1			25	MCB	3000	R	C1-7IT-2.1		3x4/20m
					19	O 2			25	MCB	2220	S	C1-7IT-2.2		3x4/8m
					20	O 3			25	MCB	2220	T	C1-7IT-2.3		3x4/12m
					21	O 4			25	MCB	3000	R	C1-7IT-2.4		3x4/22m
				4X25	22	O 5			25	MCB	3930	S	C1-7IT-2.5		3x4/11m
					23	O 6			25	MCB	3930	T	C1-7IT-2.6		3x4/10m
					23	O 7			25	MCB	3930	S	C1-7IT-2.7		3x4/22m
TOTAL		34970 W					23	83			34970	R	S	T	RST
												10480	11160	10690	2640

TABLE				ENTRANCE			LINE				FUSE		POWER	PHASE	INFORMATION		FEEDER N2XH
NAME	POWER			FUSE	ELCB		NO		SOCKET	LIGHT	CURRENT	TYPE					
	3000 W	ILLUM.P(W)	1500	20 A MCB			1	A 1		9	10	MCB	360				3x2,5N2XH
							2	A 2		6	10	MCB	420				3x2,5N2XH
							3	A 3		6	10	MCB	240				3x2,5N2XH
							4	A 4		6	10	MCB	480				3x2,5N2XH
							5	P 1	5		16	MCB	1500				3x2,5N2XH
		SOCK.P.(W)	1500														
TOTAL				3000 W					5	27			3000	R	S	T	RST
														0	0	0	0

C1-7IT-2.1/C1-7IT-2.4

TABLE				ENTRANCE			LINE				FUSE		POWER	PHASE	INFORMATION		FEEDER N2XH
NAME	POWER			FUSE	ELCB		NO		SOCKET	LIGHT	CURRENT	TYPE					
	2220 W	ILLUM.P(W)	1020	20 A MCB			1	A 1		9	10	MCB	360				3x2,5N2XH
							2	A 2		6	10	MCB	420				3x2,5N2XH
							3	A 3		6	10	MCB	240				3x2,5N2XH
							4	P 1	4		16	MCB	1200				3x2,5N2XH
		SOCK.P.(W)	1200														
TOTAL				2220 W					4	21			2220	R	S	T	RST
														0	0	0	0

C1-7IT-2.2/C1-7IT-2.3

TABLE				ENTRANCE			LINE				FUSE		POWER	PHASE		INFORMATION		FEEDER N2XH
NAME	POWER			FUSE	ELCB		NO		SOCKET	LIGHT	CURRENT	TYPE						
	3930 W	ILLUM.P(W)	630	20 A MCB			1	A 1		9	10	MCB	630					3x2,5N2XH
							2	P 1	4		16	MCB	1200					3x2,5N2XH
							3	P 2	4		16	MCB	1200					3x2,5N2XH
							4	P 3	3		16	MCB	900					3x2,5N2XH
		SOCK.P.(W)	3300															
TOTAL				3930 W					11	9			3930	R	S	T		RST
														0	0	0		0

C1-7IT-2.5/C1-7IT-2.6/C1-7IT-2.7

TABLE				ENTRANCE			LINE				FUSE		POWER	PHASE	INFORMATION		FEEDER N2XH
NAME	POWER			FUSE	ELCB		NO		SOCKET	LIGHT	CURRENT	TYPE					
C3-7IT-1	50380 W	ILLUM. P (W)		3x 80 A MCCB	4x 80A ELCB (300mA)	4x25 ELCB	1	A 1		6	10	MCB	120	S			3x2,5N2XH
							2	A 2		8	10	MCB	320	T			3x2,5N2XH
							3	A 3		5	10	MCB	200	R			3x2,5N2XH
							4	A 4		21	3x10	MCB	840	RST			5x2,5N2XH
							5	A 5		6	10	MCB	480	S			3x2,5N2XH
							6	A 6		6	10	MCB	240	R			3x2,5N2XH
							7	A 7		6	10	MCB	480	T			3x2,5N2XH
							8	A 8		7	10	MCB	520	T			3x2,5N2XH
							9	A 9		12	3x10	MCB	960	RST			5x2,5N2XH
							10	A 10			10	MCB			Auxiliary		3x2,5N2XH
						4X25 ELCB	11	P 1			16	MCB	2000	T	Hand Dry Mch		3x2,5N2XH
							12	P 2	3		16	MCB	900	S			3x2,5N2XH
							13	P 3			16	MCB	2000	S	Hand Dry Mch		3x2,5N2XH
							14	P 4	4		16	MCB	1200	R			3x2,5N2XH
							15	P 5	4		16	MCB	1200	S			3x2,5N2XH
							16	P 6			16	MCB			Auxiliary		3x2,5N2XH
							17	F 1	6		16	MCB	600	S			3x2,5N2XH
							18	F 2	6		16	MCB	600	R			3x2,5N2XH
							19	F 3	5		16	MCB	500	S			3x2,5N2XH
							20	F 4	7		16	MCB	700	T			3x2,5N2XH
		ESP (W)				4X25	21	O 1			25	MCB	3930	T	C3-7IT-1.1		3x4/31m
							22	O 2			25	MCB	3930	S	C3-7IT-1.2		3x4/30m
							23	O 3			3x25	MCB	7100	RST	C3-7IT-1.3		5x4/8m
						4x25	24	O 4			25	MCB	3930	T	C3-7IT-1.4		3x4/18m
							25	O 5			25	MCB	3000	R	C3-7IT-1.5		3x4/15m
							26	O 6			25	MCB	2220	S	C3-7IT-1.6		3x4/8m
							27	O 7			25	MCB	2220	R	C3-7IT-1.7		3x4/12m
						4x25	28	O 8			25	MCB	3140	R	C3-7IT-1.8		3x4/40m
							29	O 9			3x25	MCB	5940	RST	C3-7IT-1.9		5x4/46m
							30	O 10			25	MCB	1110	R	C3-7IT-1.10		3x4/46m
TOTAL				50380 W					35	77			50380	R	S	T	RST
														11710	11950	11880	14840

TABLE				ENTRANCE			LINE				FUSE		POWER	PHASE	INFORMATION		FEEDER N2XH
NAME	POWER			FUSE	ELCB		NO		SOCKET	LIGHT	CURRENT	TYPE					
C3-7IT-1.1/C3-7IT-1.2	3930 W	ILLUM.P(W)	630	20 A MCB			1	A 1		9	10	MCB	630				3x2,5N2XH
							2	P 1	4		16	MCB	1200				3x2,5N2XH
							3	P 2	4		16	MCB	1200				3x2,5N2XH
							4	P 3	3		16	MCB	900				3x2,5N2XH
		SOCK.P.(W)	3300														
TOTAL				3930 W					11	9			3930	R	S	T	RST
														0	0	0	0

TABLE				ENTRANCE			LINE				FUSE		POWER	PHASE	INFORMATION		FEEDER N2XH
NAME	POWER			FUSE	ELCB		NO		SOCKET	LIGHT	CURRENT	TYPE					
	7100 W	ILLUM.P(W)	1400	20 A MCB			1	A 1		6	10	MCB	420	R			3x2,5N2XH
							2	A 2		6	10	MCB	560	R			3x2,5N2XH
							3	A 3		6	10	MCB	420	S			3x2,5N2XH
							4	P 1	4		16	MCB	1200	R			3x2,5N2XH
							5	P 2	3		16	MCB	900	T			3x2,5N2XH
		SOCK.P.(W)	5700				6	P 3	4		16	MCB	1200	S			3x2,5N2XH
							7	P 4	4		16	MCB	1200	T			3x2,5N2XH
							8	P 5	3		16	MCB	600	S			3x2,5N2XH
							9	P 6	3		16	MCB	600	S			3x2,5N2XH
				3x													
TOTAL				7100 W					21	18			7100	R	S	T	RST
														2180	2820	2100	0

C3-7IT-1.3

TABLE				ENTRANCE			LINE				FUSE		POWER	PHASE	INFORMATION		FEEDER N2XH
NAME	POWER			FUSE	ELCB		NO		SOCKET	LIGHT	CURRENT	TYPE					
	3930 W	ILLUM.P(W)	630	# A MCB			1	A 1		9	10	MCB	630				3x2,5N2XH
							2	P 1	4		16	MCB	1200				3x2,5N2XH
							3	P 2	4		16	MCB	1200				3x2,5N2XH
							4	P 3	3		16	MCB	900				3x2,5N2XH
		SOCK.P.(W)	3300														
TOTAL				3930 W					11	9			3930	R	S	T	RST
														0	0	0	0

C3-7IT-1.4

TABLE				ENTRANCE			LINE				FUSE		POWER	PHASE	INFORMATION		FEEDER N2XH
NAME	POWER			FUSE	ELCB		NO		SOCKET	LIGHT	CURRENT	TYPE					
	3000 W	ILLUM.P(W)	1500	0 A MCB			1	A 1		9	10	MCB	360				3x2,5N2XH
							2	A 2		6	10	MCB	420				3x2,5N2XH
							3	A 3		6	10	MCB	240				3x2,5N2XH
							4	A 4		6	10	MCB	480				3x2,5N2XH
							5	P 1	5		16	MCB	1500				3x2,5N2XH
		SOCK.P.(W)	1500														
TOTAL				3000 W					5	27			3000	R	S	T	RST
														0	0	0	0

C3-7IT-1.5

TABLE				ENTRANCE			LINE				FUSE		POWER	PHASE	INFORMATION		FEEDER N2XH
NAME	POWER			FUSE	ELCB		NO		SOCKET	LIGHT	CURRENT	TYPE					
	3140 W	ILLUM.P(W)	1340	20 A MCB			1	A 1		9	10	MCB	360				3x2,5N2XH
							2	A 2		6	10	MCB	420				3x2,5N2XH
							3	A 3		6	10	MCB	240				3x2,5N2XH
							4	A 4		4	10	MCB	320				3x2,5N2XH
		SOCK.P.(W)	1800				5	P 1	6		16	MCB	1800				3x2,5N2XH
TOTAL				3140 W					6	25			3140	R	S	T	RST

C3-7IT-1.8

TABLE				ENTRANCE			LINE				FUSE		POWER	PHASE	INFORMATION		FEEDER N2XH
NAME	POWER			FUSE	ELCB		NO		SOCKET	LIGHT	CURRENT	TYPE					
C3-7IT-1.9	5940 W	ILLUM.P(W)	440	3x 20 A MCB			1	A 1		7	10	MCB	280	R			3x2,5N2XH
							2	A 2		4	10	MCB	160	S			3x2,5N2XH
							3	A 3			10	MCB			Auxiliary		3x2,5N2XH
							4	A 4			10	MCB			Auxiliary		3x2,5N2XH
		SOCK.P.(W)	5500				5	P 1	5		16	MCB	1500	R			3x2,5N2XH
							6	P 2			16	MCB	2000	T	Hand Dry Mch		3x2,5N2XH
							7	P 3			16	MCB	2000	S	Hand Dry Mch		3x2,5N2XH
TOTAL				5940 W					5	11			5940	R	S	T	RST
														1780	2160	2000	

TABLE				ENTRANCE			LINE				FUSE		POWER	PHASE	INFORMATION			FEEDER N2XH
NAME	POWER			FUSE	ELCB		NO		SOCKET	LIGHT	CURRENT	TYPE						
	1110 W	ILLUM.P(W)	210	20 A MCB			1	A 1		3	10	MCB	210	R				3x2,5N2XH
							2	P 1	3		16	MCB	900	T				3x2,5N2XH
		SOCK.P.(W)	900															
TOTAL				1110 W					3	3			1110	R	S	T		RST
														210	0	900		0

C3-7IT-1.10

TABLE		ENTRANCE			LINE				FUSE						
NAME	POWER	FUSE	ELCB		NO		SOCKET	LIGHT	CURRENT	TYPE	POWER	PHASE	INFORMATION		FEEDER N2XH
C3-7IT-2	34970 W	3x 50 A MCCB	4x 50A ELCB (300mA)	4x25 ELCB	1	A 1		6	10	MCB	240	R			3x2,5N2XH
					2	A 2		34	3x10	MCB	1360	RST			5x2,5N2XH
					3	A 3		6	10	MCB	240	T			3x2,5N2XH
					4	A 4		16	3x10	MCB	1280	RST			5x2,5N2XH
					5	A 5		7	10	MCB	520	R			3x2,5N2XH
					6	A 6		6	10	MCB	480	S			3x2,5N2XH
					7	A 7		8	10	MCB	320	R			3x2,5N2XH
					8	A 8			10	MCB			Auxiliary		3x2,5N2XH
					9	P 1	4		16	MCB	1200	R			3x2,5N2XH
					10	P 2	4		16	MCB	1200	R			3x2,5N2XH
					11	P 3			16	MCB	2000	T	Hand Dry Mch		3x2,5N2XH
					12	P 4	2		16	MCB	600	R			3x2,5N2XH
					13	P 5			16	MCB	2000	T	Hand Dry Mch		3x2,5N2XH
					14	P 6			16	MCB			Auxiliary		3x2,5N2XH
					15	F 1	4		16	MCB	400	R			3x2,5N2XH
					16	F 2	6		16	MCB	600	S			3x2,5N2XH
					17	F 3	3		16	MCB	300	T			3x2,5N2XH
				4x25	18	O 1			25	MCB	3000	R	C3-7IT-2.1		3x4/20m
					19	O 2			25	MCB	2220	S	C3-7IT-2.2		3x4/8m
					20	O 3			25	MCB	2220	T	C3-7IT-2.3		3x4/12m
				4x25	21	O 4			25	MCB	3000	R	C3-7IT-2.4		3x4/22m
					22	O 5			25	MCB	3930	S	C3-7IT-2.5		3x4/11m
					23	O 6			25	MCB	3930	T	C3-7IT-2.6		3x4/10m
					24	O 7			25	MCB	3930	S	C3-7IT-2.7		3x4/22m
TOTAL		34970 W					23	83			34970	R	S	T	RST
												10480	11160	10690	26240

TABLE				ENTRANCE			LINE				FUSE		POWER	PHASE	INFORMATION		FEEDER N2XH
NAME	POWER			FUSE	ELCB		NO		SOCKET	LIGHT	CURRENT	TYPE					
	3000 W	ILLUM.P(W)	1500	20 A MCB			1	A 1		9	10	MCB	360				3x2,5N2XH
							2	A 2		6	10	MCB	420				3x2,5N2XH
							3	A 3		6	10	MCB	240				3x2,5N2XH
							4	A 4		6	10	MCB	480				3x2,5N2XH
							5	P 1	5		16	MCB	1500				3x2,5N2XH
		SOCK.P.(W)	1500														
TOTAL				3000 W					5	27			3000	R	S	T	RST
														0	0	0	0

C3-7IT-2.1/C3-7IT-2.4

TABLE				ENTRANCE			LINE				FUSE		POWER	PHASE	INFORMATION		FEEDER N2XH
NAME	POWER			FUSE	ELCB		NO		SOCKET	LIGHT	CURRENT	TYPE					
	2220 W	ILLUM.P(W)	1020	20 A MCB			1	A 1		9	10	MCB	360				3x2,5N2XH
							2	A 2		6	10	MCB	420				3x2,5N2XH
							3	A 3		6	10	MCB	240				3x2,5N2XH
							4	P 1	4		16	MCB	1200				3x2,5N2XH
		SOCK.P.(W)	1200														
TOTAL				2220 W					4	21			2220	R	S	T	RST
														0	0	0	0

C3-7IT-2.2/C3-7IT-2.3

TABLE				ENTRANCE			LINE				FUSE		POWER	PHASE	INFORMATION			FEEDER N2XH
NAME	POWER			FUSE	ELCB		NO		SOCKET	LIGHT	CURRENT	TYPE						
	3930 W	ILLUM.P(W)	630	20 A MCB			1	A 1		9	10	MCB	630					3x2,5N2XH
							2	P 1	4		16	MCB	1200					3x2,5N2XH
							3	P 2	4		16	MCB	1200					3x2,5N2XH
							4	P 3	3		16	MCB	900					3x2,5N2XH
		SOCK.P.(W)	3300															
TOTAL				3930 W					11	9			3930	R	S	T	RST	
														0	0	0	0	

C3-7IT-2.5/C3-7IT-2.6/C3-7IT-2.7

TABLE				ENTRANCE			LINE				FUSE						
NAME	POWER			FUSE	ELCB		NO		SOCKET	LIGHT	CURRENT	TYPE	POWER	PHASE	INFORMATION	FEEDER N2XH
						4x25 ELCB	1	A 1		6	10	MCB	240	R		3x2,5N2XH
							2	A 2		4	10	MCB	240	S		3x2,5N2XH
							3	A 3		6	10	MCB	240	T		3x2,5N2XH
							4	A 4		4	10	MCB	240	R		3x2,5N2XH
							5	A 5		6	10	MCB	360	S		3x2,5N2XH
							6	A 6		4	10	MCB	240	T		3x2,5N2XH
							7	A 7		46	3x10	MCB	1840	RST		5x2,5N2XH
							8	A 8		8	10	MCB	320	R		3x2,5N2XH
							9	A 9		10	10	MCB	400	S		3x2,5N2XH
							10	A 10		11	10	MCB	440	T		3x2,5N2XH
							11	A 11		11	10	MCB	440	R		3x2,5N2XH
							12	A 12		10	10	MCB	400	S		3x2,5N2XH
							13	A 13		8	10	MCB	320	T		3x2,5N2XH
							14	A 14			10	MCB			Auxiliary	3x2,5N2XH
						4x25 ELCB	15	P 1	4		16	MCB	1200	S		3x2,5N2XH
							16	P 2			16	MCB	2000	T	Hand Dry Mch	3x2,5N2XH
							17	P 3			16	MCB	2000	S	Hand Dry Mch	3x2,5N2XH
							18	P 4	3		16	MCB	900	R		3x2,5N2XH
							19	P 5			16	MCB	2000	T	Hand Dry Mch	3x2,5N2XH
							20	P 6			16	MCB	2000	R	Hand Dry Mch	3x2,5N2XH
							21	P 7	4		16	MCB	1200	S		3x2,5N2XH
							22	F 1	6		16	MCB	600	T		3x2,5N2XH
							23	F 2	6		16	MCB	600	T		3x2,5N2XH
							24	F 3	6		16	MCB	600	R		3x2,5N2XH
							25	F 4	6		16	MCB	600	T		3x2,5N2XH
							26	F 5	4		16	MCB	400	T		3x2,5N2XH
							27	F 6	4		16	MCB	400	R		3x2,5N2XH
							28	F 7	5		16	MCB	500	S		3x2,5N2XH
7IT-1	W	ILLUM. P (W)	5720	MCCB	LCB (300mA)	B	29	O 1			25	MCB	1110	R	D2-7IT-1.1	3x4/38m
							30	O 2			25	MCB	1110	S	D2-7IT-1.2	3x4/35m

D2-7	64710	ESP (W)	11300	3x 100 A	4x 100A E	4x25 ELC	31	O 3			25	MCB	1110	T	D2-7IT-1.3			3x4/32m
							32	O 4			25	MCB	1110	R	D2-7IT-1.4			3x4/29m
							33	O 5			25	MCB	1110	S	D2-7IT-1.5			3x4/26m
							34	O 6			25	MCB	1110	T	D2-7IT-1.6			3x4/23m
							35	O 7			25	MCB	1110	R	D2-7IT-1.7			3x4/20m
						4x25 ELCB	36	O 8			25	MCB	1110	S	D2-7IT-1.8			3x4/17m
							37	O 9			25	MCB	1110	T	D2-7IT-1.9			3x4/14m
							38	O 10			25	MCB	1110	R	D2-7IT-1.10			3x4/11m
							39	O 11			25	MCB	1110	S	D2-7IT-1.11			3x4/8m
							40	O 12			25	MCB	1110	T	D2-7IT-1.12			3x4/11m
							41	O 13			25	MCB	1110	R	D2-7IT-1.13			3x4/14m
							42	O 14			25	MCB	1110	S	D2-7IT-1.14			3x4/17m
						4x25 ELCB	43	O 15			25	MCB	1110	S	D2-7IT-1.15			3x4/20m
							44	O 16			25	MCB	1110	R	D2-7IT-1.16			3x4/23m
							45	O 17			25	MCB	1110	S	D2-7IT-1.17			3x4/26m
							46	O 18			25	MCB	1110	T	D2-7IT-1.18			3x4/29m
							47	O 19			25	MCB	1110	R	D2-7IT-1.19			3x4/32m
							48	O 20			25	MCB	1110	S	D2-7IT-1.20			3x4/35m
							49	O 21			25	MCB	1110	T	D2-7IT-1.21			3x4/38m
						4x25 ELCB	50	O 22			25	MCB	1110	R	D2-7IT-1.22			3x4/41m
							51	O 23			25	MCB	2430	S	D2-7IT-1.23			3x4/29m
							52	O 24			25	MCB	1180	T	D2-7IT-1.24			3x4/19m
							53	O 25			25	MCB	1180	R	D2-7IT-1.25			3x4/5m
							54	O 26			25	MCB	1180	T	D2-7IT-1.26			3x4/10m
							55	O 27			25	MCB	1180	T	D2-7IT-1.27			3x4/25m
							56	O 28			25	MCB	2430	R	D2-7IT-1.28			3x4/38m
						4x25	57	O 29			3x20	MCB	2460	RST	D2-7IT-1.A1			5x4/45m
							58	O 30			3x20	MCB	2460	RST	D2-7IT-1.A2			5x4/35m
							59	O 31			3x20	MCB	2460	RST	D2-7IT-1.A3			5x4/38m
							60	O 32			3x20	MCB	2610	RST	D2-7IT-1.A4			5x4/48m
TOTAL				64710 W					48	134			64710	R	S	T		RST
														17630	17610	17640		11830

TABLE				ENTRANCE			LINE				FUSE		POWER	PHASE	INFORMATION		FEEDER N2XH
NAME	POWER			FUSE	ELCB		NO		SOCKET	LIGHT	CURRENT	TYPE					
	1110 W	ILLUM.P(W)	210	20 A MCB			1	A 1		3	10	MCB	210				3x2,5N2XH
							2	P 1	3		16	MCB	900				3x2,5N2XH
		SOCK.P.(W)	900														
TOTAL				1110 W					3	3			1110	R	S	T	RST
														0	0	0	0

D2-7IT-1.1\D2-7IT-1.2/D2-7IT-1.3/D2-7IT-1.4/D2-7IT-1.5/D2-7IT-1.6/D2-7IT-1.7/D2-7IT-1.8/D2-7IT-1.9/D2-7IT-1.10
D2-7IT-1.11\D2-7IT-1.12/D2-7IT-1.13/D2-7IT-1.14/D2-7IT-1.15/D2-7IT-1.16/D2-7IT-1.17/D2-7IT-1.18/D2-7IT-1.19
D2-7IT-1.20\D2-7IT-1.21/D2-7IT-1.22

TABLE				ENTRANCE			LINE				FUSE		POWER	PHASE	INFORMATION		FEEDER N2XH
NAME	POWER			FUSE	ELCB		NO		SOCKET	LIGHT	CURRENT	TYPE					
	1180 W	ILLUM.P(W)	280	# A MCB			1	A 1		4	10	MCB	280				3x2,5N2XH
							2	P 1	3		16	MCB	900				3x2,5N2XH
		SOCK.P.(W)	900														
TOTAL				1180 W					3	4			1180	R	S	T	RST
														0	0	0	0

D2-7IT-1.24\D2-7IT-1.25/D2-7IT-1.26/D2-7IT-1.27

TABLE				ENTRANCE			LINE				FUSE		POWER	PHASE	INFORMATION		FEEDER N2XH
NAME	POWER			FUSE	ELCB		NO		SOCKET	LIGHT	CURRENT	TYPE					
	2430 W	ILLUM.P(W)	630	20 A MCB			1	A 1		9	10	MCB	630	R			3x2,5N2XH
							2	P 1	6		16	MCB	1800	T			3x2,5N2XH
		SOCK.P.(W)	1800														
TOTAL				2430 W					6	9			2430	R	S	T	RST
														630	0	1800	0

D2-7IT-1.23\D2-7IT-1.28

TABLE				ENTRANCE			LINE				FUSE		POWER	PHASE	INFORMATION		FEEDER N2XH
NAME	POWER			FUSE	ELCB		NO		SOCKET	LIGHT	CURRENT	TYPE					
	2460 W	ILLUM.P(W)	960	20 A MCB			1	A 1		12	10	MCB	720	R			3x2,5N2XH
							2	A 2		3	10	MCB	240	S			3x2,5N2XH
							3	P 1	1		3x16	MCB	1500	RST			5x2,5N2XH
		SOCK.P.(W)	1500														
TOTAL				2460 W					1	15			2460	R	S	T	RST
														720	240	0	1500

D2-7IT-1.A1/D2-7IT-1.A2/D2-7IT-1.A3

TABLE				ENTRANCE			LINE				FUSE							
NAME	POWER			FUSE	ELCB		NO		SOCKET	LIGHT	CURRENT	TYPE	POWER	PHASE	INFORMATION			FEEDER N2XH
D2-7IT-1.A4	2610 W	ILLUM.P(W)	1110	20 A MCB			1	A 1		12	10	MCB	720	S				3x2,5N2XH
							2	A 2		3	10	MCB	240	T				3x2,5N2XH
							3	A 3		5	10	MCB	150	R				3x2,5N2XH
							4	P 1	1		3x16	MCB	1500	RST				5x2,5N2XH
		SOCK.P.(W)	1500															
TOTAL				2610 W					1	20			2610	R	S	T	RST	
														150	720	240	1500	

TABLE				ENTRANCE			LINE				FUSE		POWER	PHASE	INFORMATION		FEEDER N2XH
NAME	POWER			FUSE	ELCB		NO		SOCKET	LIGHT	CURRENT	TYPE					
D2-7IT-2	62200 W	ILLUM. P (W)		3x 100 A MCCB	4x 100A ELCB (300mA)	4x25ELCB	1	O 1			25	MCB	1110	R	D2-7IT-2.1		3x4/20m
							2	O 2			25	MCB	1110	S	D2-7IT-2.2		3x4/23m
							3	O 3			25	MCB	1110	T	D2-7IT-2.3		3x4/26m
							4	O 4			25	MCB	1110	R	D2-7IT-2.4		3x4/29m
							5	O 5			25	MCB	1110	S	D2-7IT-2.5		3x4/32m
						4x25ELCB	6	O 6			25	MCB	1110	T	D2-7IT-2.6		3x4/35m
							7	O 7			25	MCB	1110	R	D2-7IT-2.7		3x4/38m
							8	O 8			25	MCB	1110	S	D2-7IT-2.8		3x4/41m
							9	O 9			25	MCB	1110	T	D2-7IT-2.9		3x4/44m
							10	O 10			25	MCB	1110	R	D2-7IT-2.10		3x4/47m
						4x25ELCB	11	O 11			25	MCB	1110	S	D2-7IT-2.11		3x6/50m
							12	O 12			25	MCB	1110	T	D2-7IT-2.12		3x6/53m
							13	O 13			25	MCB	1110	R	D2-7IT-2.13		3x6/56m
							14	O 14			25	MCB	1110	S	D2-7IT-2.14		3x6/59m
							15	O 15			25	MCB	1110	T	D2-7IT-2.15		3x6/62m
		ESP (W)				4x25ELCB	16	O 16			25	MCB	1110	R	D2-7IT-2.16		3x6/63m
							17	O 17			25	MCB	2430	S	D2-7IT-2.17		3x4/27m
							18	O 18			25	MCB	1180	T	D2-7IT-2.18		3x4/38m
							19	O 19			25	MCB	1180	R	D2-7IT-2.19		3x6/52m
							20	O 20			25	MCB	2430	T	D2-7IT-2.20		3x6/62m
						25	21	O 21			3x25	MCB	13380	RST	D2-7IT-2.21		5x6/20m
						25	22	O 22			3x25	MCB	10640	RST	D2-7IT-2.22		5x4/27m
							23	O 23			3x25	MCB	5900	RST	D2-7IT-2.23		5x4/20m
						4x25	24	O 24			3x25	MCB	2460	RST	D2-7IT-2.A1		5x4/10m
							25	O 25			3x25	MCB	2460	RST	D2-7IT-2.A2		5x4/35m
							26	O 26			3x25	MCB	2380	RST	D2-7IT-2.A3		5x4/75m
							27				20	MCB			Auxiliary		
TOTAL				62200 W					0	0			62200	R	S	T	RST
														7840	7980	9160	37220

TABLE				ENTRANCE			LINE				FUSE		POWER	PHASE	INFORMATION		FEEDER N2XH
NAME	POWER			FUSE	ELCB		NO		SOCKET	LIGHT	CURRENT	TYPE					
	1110 W	ILLUM.P(W)	210	A MCB			1	A 1		3	10	MCB	210				3x2,5N2XH
							2	P 1	3		16	MCB	900				3x2,5N2XH
		SOCK.P.(W)	900														
TOTAL				1110 W					3	3			1110	R	S	T	RST
														0	0	0	0

D2-7IT-2.1\D2-7IT-2.2/D2-7IT-2.3/D2-7IT-2.4/D2-7IT-2.5/D2-7IT-2.6/D2-7IT-2.7/D2-7IT-2.8/D2-7IT-2.9/D2-7IT-2.10
D2-7IT-2.11\D2-7IT-2.12/D2-7IT-2.13/D2-7IT-2.14/D2-7IT-2.15/D2-7IT-2.16

TABLE				ENTRANCE			LINE				FUSE		POWER	PHASE	INFORMATION		FEEDER N2XH
NAME	POWER			FUSE	ELCB		NO		SOCKET	LIGHT	CURRENT	TYPE					
	1180 W	ILLUM.P(W)	280	20 A MCB			1	A 1		4	10	MCB	280	R			3x2,5N2XH
							2	P 1	3		16	MCB	900	T			3x2,5N2XH
		SOCK.P.(W)	900														
TOTAL				1180 W					3	4			1180	R	S	T	RST
														280		900	0

D2-7IT-2.18\D2-7IT-2.19

TABLE				ENTRANCE		LINE				FUSE							
NAME	POWER			FUSE	ELCB	NO		SOCKET	LIGHT	CURRENT	TYPE	POWER	PHASE	INFORMATION			FEEDER N2XH
	2430 W	ILLUM.P(W)	630	20 A MCB		1	A 1		9	10	MCB	630					3x2,5N2XH
		SOCK.P.(W)	1800			2	P 1	6		16	MCB	1800					3x2,5N2XH
TOTAL				2430 W				6	9			2430	R	S	T		RST
													0	0	0		0

D2-7IT-2.17\D2-7IT-2.20

TABLE				ENTRANCE		LINE				FUSE							
NAME	POWER			FUSE	ELCB	NO		SOCKET	LIGHT	CURRENT	TYPE	POWER	PHASE	INFORMATION			FEEDER N2XH
	2460 W	ILLUM.P(W)	960	20 A MCB		1	A 1		12	10	MCB	720	R				3x2,5N2XH
						2	A 2		3	10	MCB	240	S				3x2,5N2XH
		SOCK.P.(W)	1500			3	P 1	1		3x16	MCB	1500	RST				5x2,5N2XH
TOTAL				2460 W				1	15			2460	R	S	T		RST
													720	240	0		1500

D2-7IT-2.A1/D2-7IT-2.A2

TABLE				ENTRANCE			LINE				FUSE							
NAME	POWER			FUSE	ELCB		NO		SOCKET	LIGHT	CURRENT	TYPE	POWER	PHASE	INFORMATION			FEEDER N2XH
D2-7IT-2.A3	2380 W	ILLUM.P(W)	880	20 A MCB			1	A 1		12	10	MCB	720	S				3x2,5N2XH
							2	A 2		2	10	MCB	160	T				3x2,5N2XH
		SOCK.P.(W)	1500				2	P 1	1		3x16	MCB	1500	RST				5x2,5N2XH
TOTAL				2380 W					1	14			2380	R	S	T		RST
														#REF!	720	160		1500

TABLE				ENTRANCE			LINE				FUSE						
NAME	POWER			FUSE	ELCB		NO		SOCKET	LIGHT	CURRENT	TYPE	POWER	PHASE	INFORMATION		FEEDER N2XH
D2-7IT-2.21	13380 W	ILLUM.P (W)	4480	3x 20 A MCB	4x 25 A ELCB	I	1	A 1		7	10	MCB	320	S			3x2,5N2XH
							2	A 2		4	10	MCB	240	R			3x2,5N2XH
							3	A 3		35	3x10	MCB	1400	RST			5x2,5N2XH
							4	A 4		4	10	MCB	240	S			3x2,5N2XH
							5	A 5		6	10	MCB	240	R			3x2,5N2XH
							6	A 6		11	10	MCB	440	R			3x2,5N2XH
							7	A 7		8	10	MCB	320	R			3x2,5N2XH
							8	A 8		8	10	MCB	320	S			3x2,5N2XH
							9	A 9		8	10	MCB	320	T	Auxiliary		3x2,5N2XH
							10	A 10		8	10	MCB	640	T			3x2,5N2XH
		ESP (W)	6700			II	11	A 11			10	MCB		R			3x2,5N2XH
							12	P 1	4		16	MCB	1200	R			3x2,5N2XH
							13	P 2			16	MCB	2000	S	Hand Dry Mch		3x2,5N2XH
							14	P 3			16	MCB	2000	T	Hand Dry Mch		3x2,5N2XH
							15	P 4	5		16	MCB	1500	R			3x2,5N2XH
							16	P 5			16	MCB		S	Auxiliary		3x2,5N2XH
							17	F 1	6		16	MCB	600	T			3x2,5N2XH
							18	F 2	6		16	MCB	600	S			3x2,5N2XH
							19	F 3	4		16	MCB	400	T			3x2,5N2XH
							20	F 4	6		16	MCB	600	S			
TOTAL				13380 W					31	99			13380	R	S	T	RST
														3940	4080	3960	1400

TABLE				ENTRANCE			LINE				FUSE							
NAME	POWER			FUSE	ELCB		NO		SOCKET	LIGHT	CURRENT	TYPE	POWER	PHASE	INFORMATION			FEEDER N2XH
D2-7IT-2.22	10640 W	ILLUM.P (W)	1340	3x 20 A MCB	4x 25A ELCB	I	1	A 1		6	10	MCB	420	R				3x2,5N2XH
							2	A 2		6	10	MCB	240	S				3x2,5N2XH
							3	A 3		9	10	MCB	180	T				3x2,5N2XH
							4	A 4		6	10	MCB	220	R				3x2,5N2XH
							5	A 5		7	10	MCB	280	T				3x2,5N2XH
							6	A 6			10	MCB			Auxiliary			3x2,5N2XH
							7	P 1	5		16	MCB	1500	S				3x2,5N2XH
							8	P 2	3		16	MCB	900	T				3x2,5N2XH
							9	P 3			16	MCB	2000	R	Hand Dry Mch			3x2,5N2XH
							10	P 4			16	MCB	2000	T	Hand Dry Mch			3x2,5N2XH
		ESP (W)	8400			II	11	P 5			16	MCB	2000	S	Hand Dry Mch			3x2,5N2XH
							12	P 6			16	MCB			Auxiliary			3x2,5N2XH
							13	F 1	4		16	MCB	400	R				3x2,5N2XH
							14	F 2	5		16	MCB	500	R				3x2,5N2XH
							15											
TOTAL				10640 W					17	34			10640	R	S	T		RST
														3540	3740	3360		0

TABLE				ENTRANCE			LINE				FUSE						
NAME	POWER			FUSE	ELCB		NO		SOCKET	LIGHT	CURRENT	TYPE	POWER	PHASE	INFORMATION		FEEDER N2XH
D2-7IT-2.23	5800 W	ILLUM.P (W)	4600	3x 20 A MCB	4x 25A ELCB	I	1	A 1		8	10	MCB	560	S			3x2,5N2XH
							2	A 2		13	10	MCB	780	S			3x2,5N2XH
							3	A 3		10	10	MCB	800	T			3x2,5N2XH
							4	A 4		13	10	MCB	780	R			3x2,5N2XH
							5	A 5		17	3x10	MCB	1020	RST			5x2,5N2XH
							6	A 6		6	10	MCB	360	T			3x2,5N2XH
							7	A 7		5	10	MCB	300	T			3x2,5N2XH
							8	A 8			10	MCB		S	Auxiliary		3x2,5N2XH
		ESP (W)	900				9	P 1	3		16	MCB	900	R			3x2,5N2XH
							10	P 2			16	MCB		R	Auxiliary		3x2,5N2XH
						II	11	F 1	3		16	MCB	300	S			3x2,5N2XH
							12										
							13										
							14										
							15										
TOTAL				5800 W					6	72			5800	R	S	T	RST
														1680	1640	1460	1020

TABLE				ENTRANCE			LINE				FUSE					
NAME	POWER			FUSE	ELCB		NO		SOCKET	LIGHT	CURRENT	TYPE	POWER	PHASE	INFORMATION	FEEDER N2XH
							1	A 1		6	10	MCB	240	R		3x2,5N2XH
							2	A 2		4	10	MCB	240	S		3x2,5N2XH
							3	A 3		7	10	MCB	280	T		3x2,5N2XH
							4	A 4		4	10	MCB	240	R		3x2,5N2XH
							5	A 5		6	10	MCB	360	S		3x2,5N2XH
							6	A 6		4	10	MCB	240	T		3x2,5N2XH
							7	A 7		38	3x10	MCB	1520	RST		5x2,5N2XH
							8	A 8		12	10	MCB	480	R		3x2,5N2XH
							9	A 9		6	10	MCB	240	S		3x2,5N2XH
							10	A 10		10	10	MCB	400	T		3x2,5N2XH
							11	A 11		6	10	MCB	240	R		3x2,5N2XH
							12	A 12		12	10	MCB	480	S		3x2,5N2XH
						4x25 ELCB	13	A 13			10	MCB			Auxiliary	3x2,5N2XH
							14	A 14			10	MCB				3x2,5N2XH
							15	P 1	2		16	MCB	600	S		3x2,5N2XH
							16	P 2			16	MCB	2000	T	Hand Dry Mch	3x2,5N2XH
							17	P 3			16	MCB	2000	S	Hand Dry Mch	3x2,5N2XH
							18	P 4	2		16	MCB	600	R		3x2,5N2XH
							19	P 5			16	MCB	2000	T	Hand Dry Mch	3x2,5N2XH
							20	P 6			16	MCB	2000	R	Hand Dry Mch	3x2,5N2XH
						4x25 ELCB	21	P 7	3		16	MCB	900	S		3x2,5N2XH
							22	P 8	3		16	MCB	900	S		3x2,5N2XH
							23	P 9			16	MCB			Auxiliary	3x2,5N2XH
							24	F 1	6		16	MCB	600	R		3x2,5N2XH
							25	F 2	6		16	MCB	600	T		3x2,5N2XH
							26	F 3	6		16	MCB	600	T		3x2,5N2XH
							27	F 4	5		16	MCB	500	R		3x2,5N2XH
							28	F 5	6		16	MCB	600	S		3x2,5N2XH
7IT-1	W	ILLUM. P (W)		MCCB	.CB (300mA)	B	29	O 1			20	MCB	1110	R	D3-7IT-1.1	3x4/29m
							30	O 2			20	MCB	1110	S	D3-7IT-1.2	3x4/26m

D3-7	53690	ESP (W)		3x 80 A	4x 80A EL	4x25 ELC	31	O 3			20	MCB	1110	T	D3-7IT-1.3			3x4/23m
							32	O 4			20	MCB	1110	R	D3-7IT-1.4			3x4/20m
							33	O 5			20	MCB	1110	S	D3-7IT-1.5			3x4/17m
							34	O 6			20	MCB	1110	T	D3-7IT-1.6			3x4/14m
							35	O 7			20	MCB	1110	R	D3-7IT-1.7			3x4/11m
						4x25 ELCB	36	O 8			20	MCB	1110	S	D3-7IT-1.8			3x4/8m
							37	O 9			20	MCB	1110	T	D3-7IT-1.9			3x4/11m
							38	O 10			20	MCB	1110	R	D3-7IT-1.10			3x4/14m
							39	O 11			20	MCB	1110	S	D3-7IT-1.11			3x4/17m
							40	O 12			20	MCB	1110	T	D3-7IT-1.12			3x4/20m
							41	O 13			20	MCB	1110	R	D3-7IT-1.13			3x4/23m
							42	O 14			20	MCB	1110	S	D3-7IT-1.14			3x4/26m
						4x25 ELCB	43	O 15			20	MCB	1110	S	D3-7IT-1.15			3x4/29m
							44	O 16			20	MCB	1110	R	D3-7IT-1.16			3x4/32m
							45	O 17			20	MCB	1110	S	D3-7IT-1.17			3x4/35m
							46	O 18			20	MCB	1110	T	D3-7IT-1.18			3x4/38m
							47	O 19			20	MCB	1110	R	D3-7IT-1.19			3x4/41m
							48	O 20			20	MCB	1110	S	D3-7IT-1.20			3x4/44m
							49	O 21			20	MCB	1110	T	D3-7IT-1.21			3x4/41m
						4x25 ELCB	50	O 22			20	MCB	2430	R	D3-7IT-1.22			3x4/38m
							51	O 23			20	MCB	1110	S	D3-7IT-1.23			3x4/35m
							52	O 24			20	MCB	1110	T	D3-7IT-1.24			3x4/8m
							53	O 25			20	MCB	1110	R	D3-7IT-1.25			3x4/11m
							54	O 26			20	MCB	1110	T	D3-7IT-1.26			3x4/15m
							55	O 27			20	MCB	1110	T	D3-7IT-1.27			3x4/11m
							56	O 28			20	MCB	1110	T	D3-7IT-1.28			3x4/15m
							57	O 29			20	MCB	2430	T	D3-7IT-1.29			3x4/24m
TOTAL				53690 W					39	115			53690	R	S	T	RST	
														16210	16310	19650	1520	

TABLE				ENTRANCE			LINE				FUSE							
NAME	POWER			FUSE	ELCB		NO		SOCKET	LIGHT	CURRENT	TYPE	POWER	PHASE	INFORMATION			FEEDER N2XH
	1110 W	ILLUM.P(W)	210	20 A MCB			1	A 1		3	10	MCB	210					3x2,5N2XH
							2	P 1	3		16	MCB	900					3x2,5N2XH
		SOCK.P.(W)	900															
TOTAL				1110 W					3	3			1110	R	S	T		RST
														0	0	0		0

D3-7IT-1.1\D3-7IT-1.2/D3-7IT-1.3/D3-7IT-1.4/D3-7IT-1.5/D3-7IT-1.6/D3-7IT-1.7/D3-7IT-1.8/D3-7IT-1.9/D3-7IT-1.10
D3-7IT-1.11\D3-7IT-1.12/D3-7IT-1.13/D3-7IT-1.14/D3-7IT-1.15/D3-7IT-1.16/D3-7IT-1.17/D3-7IT-1.18/D3-7IT-1.19
D3-7IT-1.20\D3-7IT-1.21/D3-7IT-1.23/D3-7IT-1.24/D3-7IT-1.25/D3-7IT-1.26/D3-7IT-1.27/D3-7IT-1.28

TABLE				ENTRANCE			LINE				FUSE							
NAME	POWER			FUSE	ELCB		NO		SOCKET	LIGHT	CURRENT	TYPE	POWER	PHASE	INFORMATION			FEEDER N2XH
	2430 W	ILLUM.P(W)	630	20 A MCB			1	A 1		9	10	MCB	630					3x2,5N2XH
							2	P 1	6		16	MCB	1800					3x2,5N2XH
		SOCK.P.(W)	1800															
TOTAL				2430 W					6	9			2430	R	S	T		RST
														0	0	0		0

D3-7IT-1.22\D3-7IT-1.29

TOTAL UNIT COST PRICE

Ref No	Equipment to be used	Amount	Unit	Unit Price		Total Price	
A-13.10	ATY2-4x18W	1273	pcs	230	YTL	292790	YTL
A-13.2	Ö-1x18W	50	pcs	139	YTL	6950	YTL
A-13.3	Ö-1X28W	349	pcs	153	YTL	53397	YTL
A-15.2	Ö-1X36W	1511	pcs	219	YTL	330909	YTL
A-15.2	Ö2-1X36W	78	pcs	219	YTL	17082	YTL
A-13.5	Ö-2x18W	1378	pcs	178	YTL	245284	YTL
A-13.5	Ö-2x26W	531	pcs	178	YTL	94518	YTL
A-13.6	Ö-2x36W	223	pcs	195	YTL	43485	YTL
A-13.15	Ö-2x28W	128	pcs	155	YTL	19840	YTL
A-13.19	Ö-4x14W	3056	pcs	215	YTL	657040	YTL
A-13.4	Ö-1x60W	31	pcs	164	YTL	5084	YTL
A-13.2	P1-1x18W	14	pcs	139	YTL	1946	YTL
A-15.2	P1-1x36W	173	pcs	219	YTL	37887	YTL
A-13.6	P1-2x36W	230	pcs	195	YTL	44850	YTL
A-13.2	T-1x18W	83	pcs	139	YTL	11537	YTL
C-1.1	Electrical Socket	3572	pcs	67	YTL	239324	YTL
D-1.1	Telephone Socket	1199	pcs	88	YTL	105512	YTL
D-16.5	Data Socket	1061	pcs	88	YTL	93368	YTL
D-14	TV Socket	286	pcs	90	YTL	25740	YTL
H-3.10	Main Distribution Table 3x5 500 A with Busbar	1	pcs	5288	YTL	5288	YTL
H-3.22	Main Distribution Table 3x5 1000 A with Busbar	3	pcs	8917	YTL	26751	YTL
H-1.1	Distribution Table 3Ø MCB 3x100 A	8	pcs	735	YTL	5880	YTL
H-1.1	Distribution Table 3Ø MCB 3x80 A	14	pcs	735	YTL	10290	YTL
H-1.1	Distribution Table 3Ø MCB 3x63 A	9	pcs	735	YTL	6615	YTL
H-1.1	Distribution Table 3Ø MCB 3x50 A	8	pcs	735	YTL	5880	YTL
H-1.1	Distribution Table 3Ø MCB 3x40 A	3	pcs	735	YTL	2205	YTL
H-1.1	Distribution Table 3Ø MCB 3x32 A	1	pcs	735	YTL	735	YTL

H-1.1	Distribution Table 3Ø MCB 3x25 A	5	pcs	735	YTL	3675 YTL
I-2.7	Distribution Table 3Ø MCB 3x10-3x16 A	159	pcs	191	YTL	30369 YTL
I-2.7	Distribution Table 1Ø MCB 1x10-1x16 A	466	pcs	191	YTL	89006 YTL
H-4.40	MCCB+ELCB 4x100A	8	pcs	13993	YTL	111944 YTL
H-4.40	MCCB+ELCB 4x80A	14	pcs	13993	YTL	195902 YTL
H-4.39	MCCB+ELCB 4x63A	9	pcs	11755	YTL	105795 YTL
H-4.39	MCCB+ELCB 4x50A	8	pcs	11755	YTL	94040 YTL
H-4.39	MCCB+ELCB 4x40A	3	pcs	11755	YTL	35265 YTL
H-4.39	MCCB+ELCB 4x32A	1	pcs	11755	YTL	11755 YTL
H-4.5	MCCB+ELCB 4x25A	5	pcs	11755	YTL	58775 YTL
H-4.14	MCCB 3x3000A	1	pcs	13426	YTL	13426 YTL
H-4.8	MCCB 3x500A	1	pcs	1663	YTL	1663 YTL
H-4.10	MCCB 3x1000A	3	pcs	1536	YTL	4608 YTL
H-4.17	MCCB 3x125A	8	pcs	510	YTL	4080 YTL
H-4.4	MCCB 3x100A	14	pcs	189	YTL	2646 YTL
H-4.4	MCCB 3x80A	9	pcs	189	YTL	1701 YTL
H-4.3	MCCB 3x63A	8	pcs	181	YTL	1448 YTL
H-4.3	MCCB 3x50A	3	pcs	181	YTL	543 YTL
H-4.3	MCCB 3x40A	1	pcs	181	YTL	181 YTL
H-4.3	MCCB 3x32A	5	pcs	181	YTL	905 YTL
H-6.4	3x500A Busbar	1	pcs	979	YTL	979 YTL
H-6.6	3x1000A Busbar	3	pcs	2433	YTL	7299 YTL
H-6.11	3x3000A Busbar	1	pcs	9484	YTL	9484 YTL
H-2.3	kWh 3Ø	1	pcs	372	YTL	372 YTL
O-1.2	50kVAr 415V Companzation Table	4	pcs	2836	YTL	11344 YTL
O-1.4	100kVAr 415V Companzation Table	8	pcs	7819	YTL	62552 YTL
Totally						3249944 YTL