Digital Signal Processing

Homework 1

1. Determine the even and odd components:

a) x(k)= [2, 0, $\underset{\uparrow}{-2}$, 3, 1, 2]; b) $x(n)=n^2$

2. Determine the fundamental period of

a) $x(n) = \cos(0.2\pi n)$

3. x(k)= [2, 0, -3, 1, 2, 5]; Find x(-k); x(2-k); x(-2-k);

4. y(n)=x(n)*h(n); where * is a linear convolution;

x(n)= $\left\{ \underset{\uparrow}{5}, 2, 4, -1 \right\}$ h(n)= $\left\{ \underset{\uparrow}{-3}, 4, 0, 2, -1, 2 \right\}$ y(n)=?

Check result with a convolution table and Matlab.

5. Determine where system is 1) linear 2) causal, 3) stable and 4) time-invariant.

a) y(n)=nx(n) b) $y(n)=x^2(n)$

6. Develope the relation between x(n) and y(n)

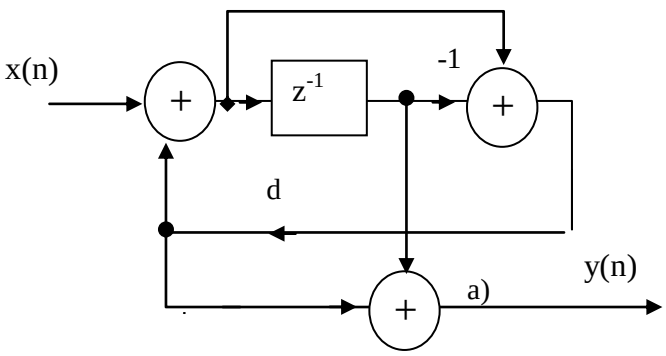

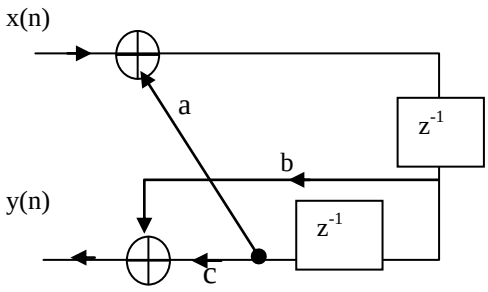

Figure 1 b)

7. Find Z-transform

a) direct:

- $x_1(n)= (0.3)^n Us(n)$
- $x_3= n$

b) inverse:

$$y(z)=\frac{1}{(z+0.5)(z-1)^2}; \quad 0.5<|z|<1$$